GENERAL NOTES

(SITE SPECIFIC)

BUSHFIRE HAZARD REQUIREMENTS BAL12.5

AS PER A.S.-3959 CONSTRUCTION OF BUILDINGS IN BUSHFIRE PRONE AREAS

1/. PROVIDE BAL COMPLIANT SCREENS WITH A MAXIMUM APERTURE SIZE OF 2.0MM TO ALL OPENING WINDOWS AND EXTERNAL HINGED DOORS IN ACCORDANCE WITH A.S. 3959 CLAUSE 5.5.1 A

2/. PROVIDE SARKING UNDER ROOF TILES, ANTICON UNDER SHEET ROOFING.

3/. PROVIDE SPARK GUARDS WITH A MAXIMUM APERTURE SIZE OF 2.0MM TO ALL WEEP HOLES, ROOF & EAVE VENTS.

4/. PROVIDE DOOR SEALS TO ALL EXTERNAL DOORS AND GARAGE SECTIONAL OVERHEAD DOOR.

5/. PROVIDE FIRE RESISTANT CLADDING & TIMBER TO ALL EXPOSED LOCATION (WHERE APPLICABLE).

6/. PROVIDE TOUGHENED GLASS (WHERE APPLICABLE).

REFER TO DETAIL SHEETS:

QS-TYP-GARA-01	BRICK VENEER GARAGE DETAIL
QS-TYP-MISC-04	FLASHING DETAILS
QS-TYP-BEAM-01	TYPICAL TIMBER/STEEL BEAM DETAIL
QS-TYP-WIND-05a	SUMMARY INFILLS ABOVE WINDOWS AND DOORS
Q-TYP-MODE-12	FACADE DETAIL - MODE
QS-TYP-CLAD-01	AXON CLADDING DETAIL
QS-TYP-CLAD-10	SCREEN CLAD CEDAR LINING DETAIL
QS-TYP-CLAD-16	EPS CLADDING DETAIL

REVISION TABLE

REV	DATE	COMMENT	DR	CH
1	17.05.19	PRELIMINARY	SMX	CG5
2	23.08.19	PC2	PG4	JNE
3	12.09.19	HOUSE RE-SITE	RC2	-
4	18.12.19	CONTRACT	PG3	DRL
5	16.04.20	AMD FLOOR JOIST HT	AI3	-
6	15.06.20	V01	ROO	-
7	18.06.20	FC PLANS	ROO	JNE
8	-	-	-	-
9	-	-	-	-
10	-	-	-	-
11	-	-	-	-
12	-	-	-	-
13	-	-	-	-
14	-	-	-	-
15	-	-	-	-
16	-	-	-	-
17	-	-	-	-
18	-	-	-	-
19	-	-	-	-
20	-	-	-	-
21	-	-	-	-
22	-	-	-	-
23	-	-	-	-
0				
0				

STANDARD NOTES:

*WRITTEN DIMENSIONS TAKE PRECEDENCE OVER SCALE.

*FLOOR PLAN DIMENSIONS ARE TO FRAME SIZE ONLY.

FRAMING

- ALL STRUCTURAL TIMBER FRAMING SIZES TO BE IN ACCORDANCE WITH A.S. 1684 NATIONAL TIMBER FRAMING CODE & OR ENGINEERS STRUCTURAL COMPUTATIONS.
- FLOOR TO BE PREFABRICATED TO MANUFACTURERS SPEC. & ALLOW 300MM MIN' DEPTH TO ALLOW FOR SERVICES
- SPACED & FIXED TO PROVIDE SUPPORT @ 450MM CRS.

ROOF FRAMING

- PREFABRICATED ROOF TRUSSES TO MANUFACTURERS SPECIFICATIONS. PITCH AS SHOWN ON ELEVATIONS.
- INTERNAL CEILING AREAS SPACED & FIXED AT 600MM MAX. CRS.
- EXTERNAL CEILING AREAS SPACED & FIXED AT 450MM MAX. CRS.
- SKILLION ROOF SPACED & FIXED AT 900MM MAX.; CRS.
- GIRDER TRUSSES TO BE PLACED DIRECTLY OVER EXTERNAL WALL STUDS OR APPROVED LINTEL.

WALL FRAMING

- EXTERNAL STUD WALLS 70MM TH, U.N.O. @ 600 MAX. CRS
- INTERNAL STUD WALLS 70MM TH U.N.O. @ 600 MAX. CRS
- ALL WINDOWS HEADS TO FINISH FLUSH WITH SOFFIT LINING U.N.O.
- LINTEL SIZES TO ENGINEERS DESIGN
- WALL BRACING, FIXING, TIE DOWNS, DURABILITY NOTES & ANY ADDITIONAL ENGINEERING REQ. TO BE AS PER ENGINEERS DETAIL

GARAGE DOOR

- 2100MM GARAGE DOOR OPENING, FRAMING AT 2080MM AFFL
- 2130MM GARAGE DOOR OPENING, FRAMING AT 2105MM AFFL
- GARAGE DOOR OPENING > 2130MM, FRAMING 25MM BELOW OPENING DIMENSION

CLADDING

ROOF CLADDING/PLUMBING

- CLADDING AS SPECIFIED ON ELEVATIONS
- SELECT COLORBOND FASCIA & GUTTER
- RAINHEADS / DOWNPIPES TO BE CONNECTED TO U/G DRAINAGE

INTERNAL CEILING/WALL - GENERAL.

- CEILING 'DIRECT FIX' 10MM UNISPAN PLASTERBOARD (OR APPROVED EQUIVALENT) U.N.O.
- WALLS TO BE 10MM PLASTERBOARD U.N.O.

EXTERNAL CEILING/WALL - GENERAL.

- CEILINGS 'DIRECT FIX' 10MM UNISPAN (OR APPROVED EQUIVALENT) PLASTERBOARD U.N.O.
- BRICK GAUGE TO SUIT WINDOW HEAD HEIGHT.
- PROVIDE FC. SHEET INFILL ABOVE SIDE & REAR ELEVATION WINDOWS & DOORS WHERE INDICATED BY HATCHING, TO WALLS WITH FACE BRICK OR BAG & PAINT FINISH. USE BLUEBOARD INFILL (EPS WHERE APPLICABLE) WHEN SELECTED RENDER FINISH TO BRICKWORK. REFER TO STD INFILL DETAIL SUMMARY "QS-TYP-WIND-05A".
- USE F.F.L. FOR DATUM OF WALL BRICK COURSES
- A.J. - DENOTES BRICKWORK ARTICULATION JOINTS. REFER TO ENGINEERS SLAB DESIGN &/OR NCC 3.3.1.8 FOR FULL HEIGHT MASONRY ARTICULATION JOINT LOCATIONS.
- ALL PARAPET WALLS TO BE PROVIDED WITH COLORBOND METAL CAPPING/FLASHING (50MM MIN' LAP TO ALL JOINS WITH CONTINUOUS SILICON SEAL BETWEEN & 30MM MIN' VERTICAL OVERHANG.)
- PROVIDE CAVITY FLASHING & WEEP HOLES ABOVE LOWER STOREY OPEN.
- RENDERER IS TO ENSURE WINDOW & DOOR OVERFLOW DRAINAGE HOLES ARE KEPT FREE OF RENDER & ARE NOT BLOCKED, IF RENDERED.

SOFFIT DETAIL

- 4.5MM FC SHEET (U.N.O.)
- SPECIFIED EAVE WIDTH, MEASURED FROM FACE OF BRICK.
- FOR BRICKWORK: ADD 160MM TO EAVE WIDTH FROM FRAME IN LIGHTWEIGHT CLAD AREAS.

  FOR HEBEL: ADD 115MM TO EAVE WIDTH FROM FRAME IN LIGHTWEIGHT CLAD AREAS. DISREGARD (PACKING/ CLADDING).

BRICK PIERS/COLUMNS/POSTS

- PROVIDE BALCONY/ PORTICO &/OR ROOF SUPPORT WITH ENCASED SLIP JOINT SHS POSTS (FULL LENGTH U.N.O.) CHEM-SET TO CONCRETE FOOTING TO ENGINEERS DETAIL
- HEADER COURSE TO TOP OF ALL BRICK PIERS LOWER THAN SOFFIT LINE U.N.O.
- USE 330MM BELOW FFL FOR DATUM OF PIER BRICK COURSES
- REFER TO 'Q-TYP-POST TYPES' FOR SHS POSTS DETAILS

TERMITE PROTECTION

- PROVIDE TERMITE MANAGEMENT SYSTEM DEEMED TO SATISFY A.S. 3660.1

STEPS/STAIRS & BALUSTRADES

- ALL STEPS MUST COMPLY WITH NCC 3.9.1.
- BARRIERS & HANDRAILS MUST COMPLY WITH NCC 3.9.2.

WET AREAS

- WATERPROOFING OF WET AREAS TO COMPLY WITH A.S. 3870 & NCC 3.8.1
- WALL LINING TO WET AREAS TO BE 6MM VILLABOARD U.N.O..
- CEILING 'DIRECT FIX' 10MM UNISPAN (OR EQUIVALENT) PLASTERBOARD.
- ALL WALL TILING HEIGHTS ARE NOMINAL, AND TO BE ADJUSTED ON SITE TO SUIT. SHOWER TILING TO EXTEND MIN. 20MM ABOVE SCREEN.

GLAZING

- WINDOW HEAD HEIGHT DIMENSION GENERALLY TAKEN TO THE NEAREST CORRESPONDING BRICK COURSE.
- WIN. SUPPLIER TO SUPPLY COVER BOARDS TO ALL CORNER WIN. U.N.O.
- ALUMIN. SLIDING WIN. & DOORS TO SIDE & REAR ELEVATIONS U.N.O.
- ALL GLAZING TO COMPLY WITH A.S. 1288 GLASS IN BUILDINGS, & WITH A.S. 4055 FOR WIND LOADING
- ALL WINDOWS WITH A SILL HEIGHT OF 2M OR MORE ABOVE GROUND LEVEL SHALL BE RESTRICTED TO BE UNOPENABLE BEYOND 125MM, TO COMPLY WITH NCC 3.9.2.5 REQUIREMENTS (U.N.O.)

ENERGY EFFICIENCY NOTES

- PROVIDE BULK CEILING INSULATION AS PER STD SPECIFICATIONS (U.N.O.).
- PROVIDE EXTERNAL WALL INSULATION AS PER STD SPECIFICATIONS (U.N.O.)
- PROVIDE WEATHER STRIPPING TO ENTRY & LAUNDRY DOORS.
- SEALED GAPS AROUND WINDOWS & EXTERNAL DOORS TO BE INSTALLED IN ACCORDANCE WITH NCC 3.5.4.6 & A.S. 2904.

MISCELLANEOUS

- ALL HWU'S TO BE AS NOMINATED.
- FLUES FOR ALL HEATERS (WHERE APPLICABLE) ARE TO BE INSTALLED TO MANUFACTURERS SPECIFICATIONS
- ALL WATER CLOSET DOORS TO BE REMOVABLE IN ACCORDANCE WITH NCC 3.8.3.
- ALL PLUMBING, DRAINAGE & ASSOCIATED WORKS TO COMPLY WITH THE PLUMBING CODE OF AUSTRALIA, NCC & A.S. 3500
- PROVIDE MINIMUM 125mm SLOTTED GUTTERS WITH APPROVED OVERFLOW SPACERS
- ALL PLIABLE MEMBRANES TO COMPLY AND BE INSTALLED IN ACCORDANCE WITH NCC 3.8.7.2, A.S. 4200.1 & A.S. 4200.2.
- ALL EXHAUST FANS TO BE DUCTED EXTERNALLY TO EAVE VENT OR WALL VENT, AND COMPLY WITH NCC 3.8.7.3.

CONCRETE SLAB ON GROUND

- CONCRETE SLAB TO ENGINEERS DETAIL

STEEL FRAMING REQUIREMENTS (WHERE APPLICABLE):

- 70MM STEEL FRAME & TRUSSES REQUIRING THE ISSUE OF A SIGNED COMPLIANCE CERTIFICATE FOR THE BUILDING DESIGN - FORM 15 UPON COMPLETION AND PRIOR TO FINAL CERTIFICATION
- STEEL FRAMES AND TRUSSES TO COMPLY WITH:
- AS/NZS 1170.0 STRUCTURAL DESIGN ACTIONS: PART 0:GENERAL PRINCIPLES
- AS/NZS1170.1 STRUCTURAL DESIGN ACTIONS: PART1: PERMANENT, IMPOSED AND OTHER ACTIONS
- AS/NZS 4600 COLD-FORMED STEEL STRUCTURES
- AS4055 WIND LOADS FOR HOUSING
- AS4100 STEEL STRUCTURES CODE
- AS 3623 DOMESTIC METAL FRAMING
- AS 3566.1 SELF DRILLING SCREWS

DESIGN: WATERFORD 53

FACADE: MODE CEILING: 30, R

GARAGE: DOUBLE

COVER PAGE : NOTES

METRICON HOMES OWNS COPYRIGHT IN THIS DRAWING. UNAUTHORISED USE, REPRODUCTION OR ADAPTION IS FORBIDDEN AND WILL BE PROSECUTED.

DESIGNER | metricon

BY METRICON

Suite 20 Level 2 Riverwalk Place, 238 Robina Town Centre Drive, Robina, QLD Tel: 07 5501 7200 Fax: 07 5562 2194.
Metricon Homes QLD Pty Ltd is licensed under the QBCC Act 1991 (QBCC Licence 40992), NSW Builders License 36654C.

COPYRIGHT 2009 reproduction forbidden. Unathorised use, reproduction or adaption is forbidden and will be prosecuted.

OWNER: C. PAN & X. MA

LOT 801 KATE CIRCUIT

ROCHEDALE

JOB NO: 701444 MST VER: APRIL 2019

PERMIT No: 00060205 DWS: 4829

CONSTRUCTION

DATE : 18.06.20 ROO

SHEET: 1A of 12

1:200 - Orig A3

2 0 2 4 6 8 10

metricon

NSW BSA No: 36654C QLD BSA No: 040992
ACN: 053189496

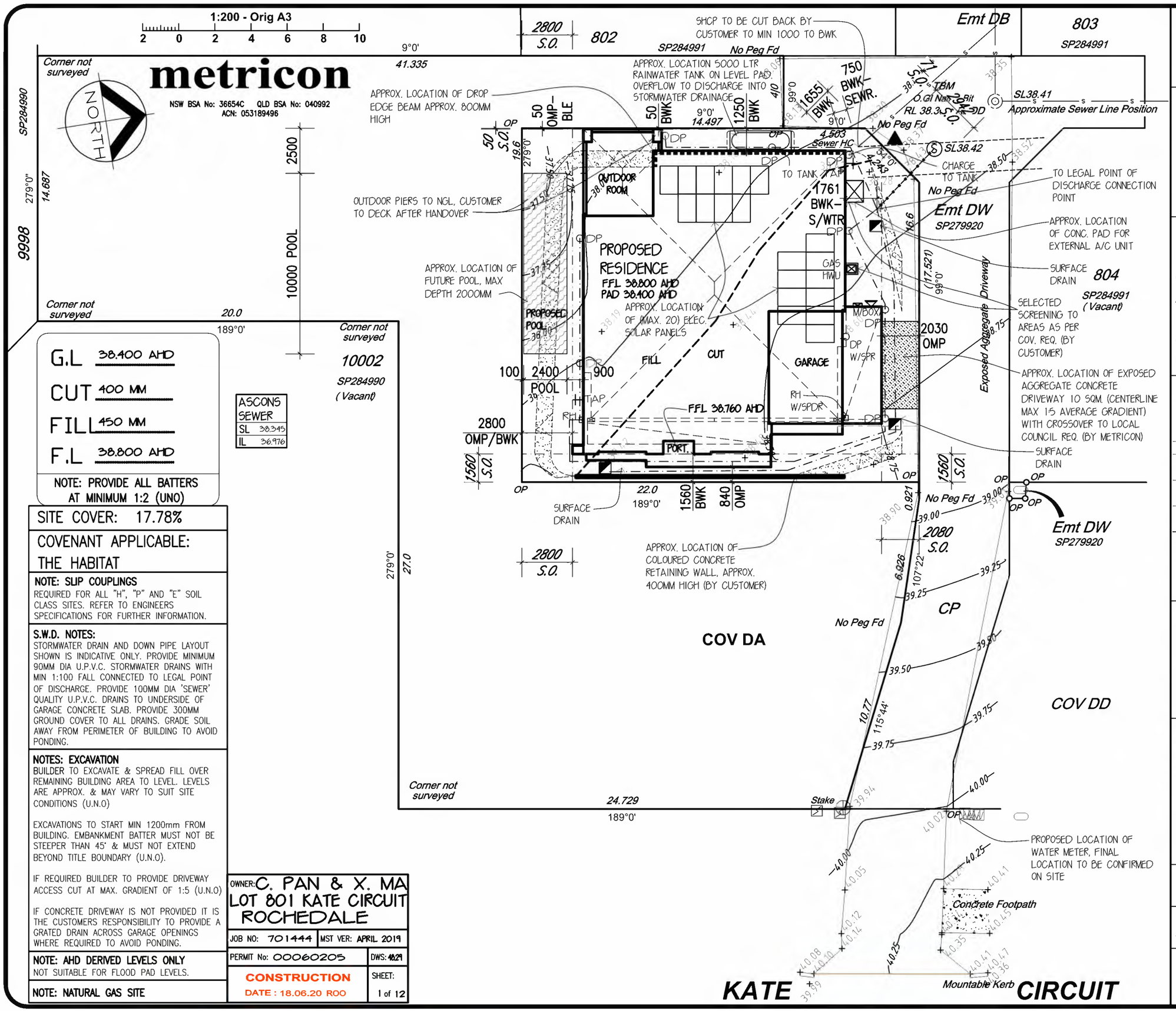

G.L	38.400 AHD
CUT	400 MM
FILL	450 MM
F.L	38.800 AHD

NOTE: PROVIDE ALL BATTERS AT MINIMUM 1:2 (UNO)

ASCONS SEWER	
SL	38.345
IL	36.976

SITE COVER: 17.78%

COVENANT APPLICABLE: THE HABITAT

NOTE: SLIP COUPLINGS
REQUIRED FOR ALL "H", "P" AND "E" SOIL CLASS SITES. REFER TO ENGINEERS SPECIFICATIONS FOR FURTHER INFORMATION.

S.W.D. NOTES:
STORMWATER DRAIN AND DOWN PIPE LAYOUT SHOWN IS INDICATIVE ONLY. PROVIDE MINIMUM 90MM DIA U.P.V.C. STORMWATER DRAINS WITH MIN 1:100 FALL CONNECTED TO LEGAL POINT OF DISCHARGE. PROVIDE 100MM DIA 'SEWER' QUALITY U.P.V.C. DRAINS TO UNDERSIDE OF GARAGE CONCRETE SLAB. PROVIDE 300MM GROUND COVER TO ALL DRAINS. GRADE SOIL AWAY FROM PERIMETER OF BUILDING TO AVOID PONDING.

NOTES: EXCAVATION
BUILDER TO EXCAVATE & SPREAD FILL OVER REMAINING BUILDING AREA TO LEVEL. LEVELS ARE APPROX. & MAY VARY TO SUIT SITE CONDITIONS (U.N.O)

EXCAVATIONS TO START MIN 1200mm FROM BUILDING. EMBANKMENT BATTER MUST NOT BE STEEPER THAN 45° & MUST NOT EXTEND BEYOND TITLE BOUNDARY (U.N.O).

IF REQUIRED BUILDER TO PROVIDE DRIVEWAY ACCESS CUT AT MAX. GRADIENT OF 1:5 (U.N.O)

IF CONCRETE DRIVEWAY IS NOT PROVIDED IT IS THE CUSTOMERS RESPONSIBILITY TO PROVIDE A GRATED DRAIN ACROSS GARAGE OPENINGS WHERE REQUIRED TO AVOID PONDING.

NOTE: AHD DERIVED LEVELS ONLY
NOT SUITABLE FOR FLOOD PAD LEVELS.

NOTE: NATURAL GAS SITE

OWNER: C. PAN & X. MA
LOT 801 KATE CIRCUIT
ROCHEDALE

JOB NO: 701444	MST VER: APRIL 2019
PERMIT No: 00060205	DWS: 4029
CONSTRUCTION DATE : 18.06.20 R00	SHEET: 1 of 12

CONTOUR SURVEY PLAN

CLIENT: Metricon Homes Qld Pty Ltd

SITE ADDRESS:
Lot 801 Kate Circuit,
Rochedale

REAL PROPERTY DESCRIPTION

Lot:	801
on:	SP284991
Area:	1432 m²
Local Authority:	Brisbane C. C.
Contour Interval:	0.25m
Datum:	AHDD (GPS 3DCQ = 0.019m)

LEGEND

LIGHT POLE	LOCATOR POTHOLE
POWER POLE	FIRE HYDRANT
POWER BOX	AIR VALVE
POWER LINE	STOP VALVE
UNDERGROUND ELEC	WATER METER
TELSTRA PIT	WATER LINE
TELSTRA LINE	STORMWATER M/HOLE
GAS MARKER	GULLY GRATE
GAS LINE	ROOFWATER PIT
SEWER MANHOLE	STORMWATER LINE
SEWER LINE	ROCK RETAINING WALL
SIGN	TIMBER RET WALL
TEMPORARY BENCH MARK	TOP OF BANK
PERMANENT SURVEY MARK	TOE OF BANK
ORIGINAL PEG	FENCE

Disclaimer:
The position of Fence Lines, Retaining Walls and other detail is indicative only and should not be relied upon as depicting the Boundary Lines. This is a plan of VISIBLE SERVICES ONLY. The location of pegs found have NOT BEEN CHECKED and as such should not be relied on as marking the corners of the lot. An Identification Survey should be carried out prior to any construction works.

KEVIN HOLT CONSULTING
SURVEYORS AND TOWN PLANNERS
1D Technology Office Park
107 Miles Platting Road
Eight Mile Plains Qld 4113
Phone 07 3219 0400
Fax 07 3219 0900
Email brisbane@kevinholtconsulting.com

DATE SURVEYED: 21/3/2019
SURVEYOR: NH (AP)

A3 **SCALE:** 1:200
DATE DRAFTED: 27/3/2019

JOB NO.	PLAN NO. REV
J190946	J190946 - 01A

NOTE:
FLUSH EAVE UNO.

NOTE: PROVIDE CONCEALED WC "IN WALL" CISTERN, WITHIN 90mm DEEP WALL FRAME (U.N.O.) TO P'DR 1, ENS WC & BATH.

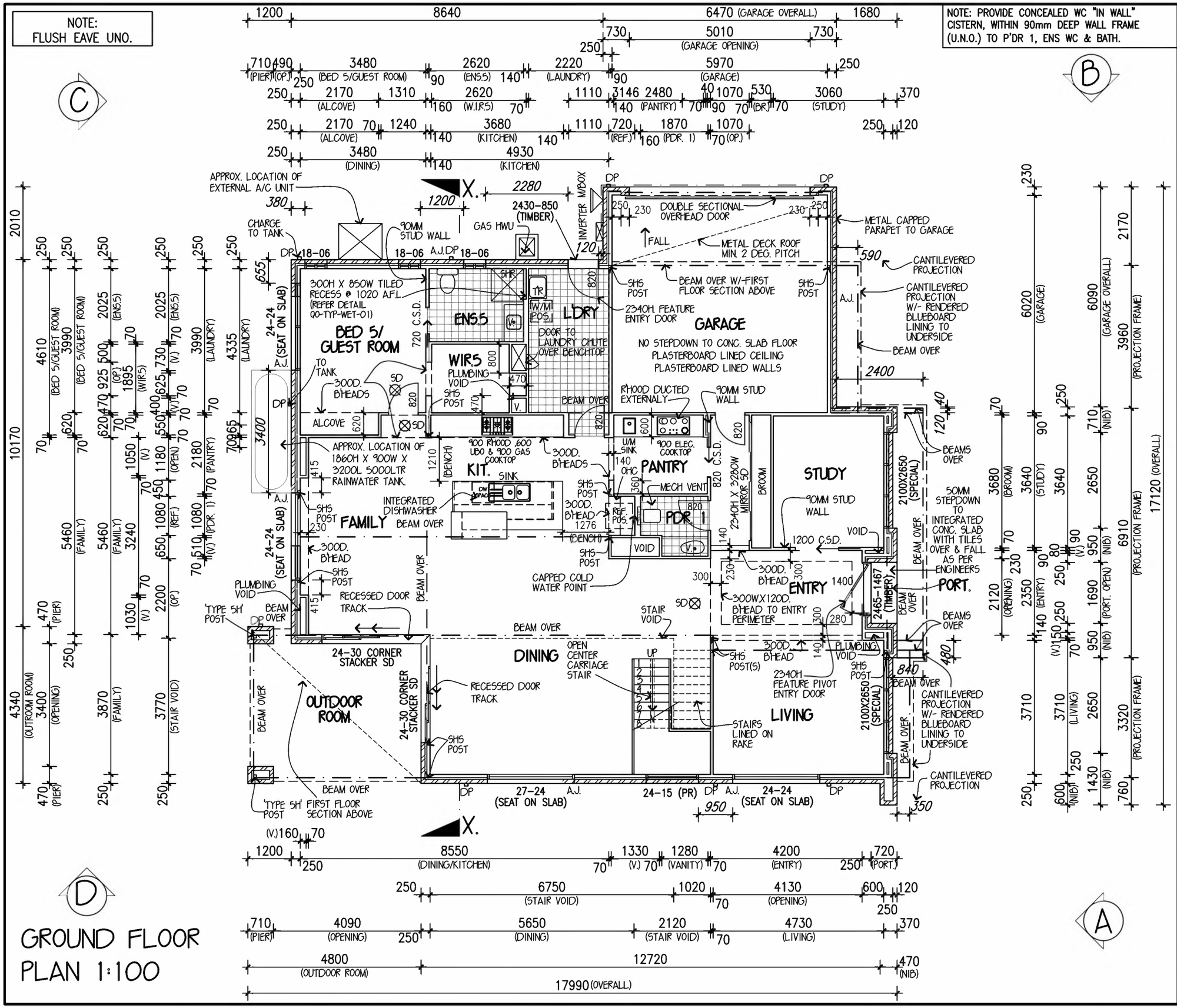

GROUND FLOOR PLAN 1:100

NOTE: CENTRE ALL WINDOWS & EXTERNAL DOORS INTERNALLY TO ROOM (U.N.O.) INTERNAL HINGED DOORS TO BE CENTRED TO THE HALLWAY

NOTE: PROVIDE BUSHFIRE HAZARD REQUIREMENTS

NOTE:
PROVIDE BLUE H2-F TREATED TIMBER FRAME & TRUSSES

NOTE:
2340mm HIGH INTERNAL DOORS THROUGHOUT U.N.O.

NOTE:
PROVIDE SELECTED HOME NETWORK PACKAGE.

NOTE:
PROVIDE 3 PHASE POWER SUPPLY

NOTE:
PROVIDE FULLY DUCTED REVERSE CYCLE AIR-CONDITIONING SYSTEM

NOTE:
PROVIDE CONNECTION TO NATURAL GAS SUPPLY

NOTE:
PROVIDE NO CORNICE & FULL HEIGHT TILING TO ENSUITE 1,2,5,BATH & POWDER ROOM .

AREAS:		GARAGE:	39.38 SQM
GRD FLR:	194.89 SQM	O'DOOR RM:	19.14 SQM
FIRST FLR:	248.12 SQM	PORTICO:	1.22 SQM
SUBTOTAL:	443.01 SQM	TOTAL:	502.75 SQM
	47.69 SQR		54.12 SQR

DESIGN: WATERFORD 53

FACADE: MODE CEILING: 30, R

GARAGE: DOUBLE

FLOOR PLAN

METRICON HOMES OWNS COPYRIGHT IN THIS DRAWING. UNAUTHORISED USE, REPRODUCTION OR ADAPTION IS FORBIDDEN AND WILL BE PROSECUTED.

DESIGNER metricon

BY METRICON

Suite 20 Level 2 Riverwalk Place, 238 Robina Town Centre Drive, Robina, QLD Tel: 07 5501 7200 Fax: 07 5562 2194.
Metricon Homes QLD Pty Ltd is licensed under the QBCC Act 1991 (QBCC Licence 40992), NSW Builders License 36654C.
COPYRIGHT 2009 reproduction forbidden. Unathorised use, reproduction or adaption is forbidden and will be prosecuted.

OWNER: C. PAN & X. MA
LOT 801 KATE CIRCUIT
ROCHEDALE

JOB NO: 701444 MST VER: APRIL 2019

PERMIT No: 00060205 DWS: 48.29

CONSTRUCTION
DATE : 18.06.20 ROO

SHEET: 2 of 12

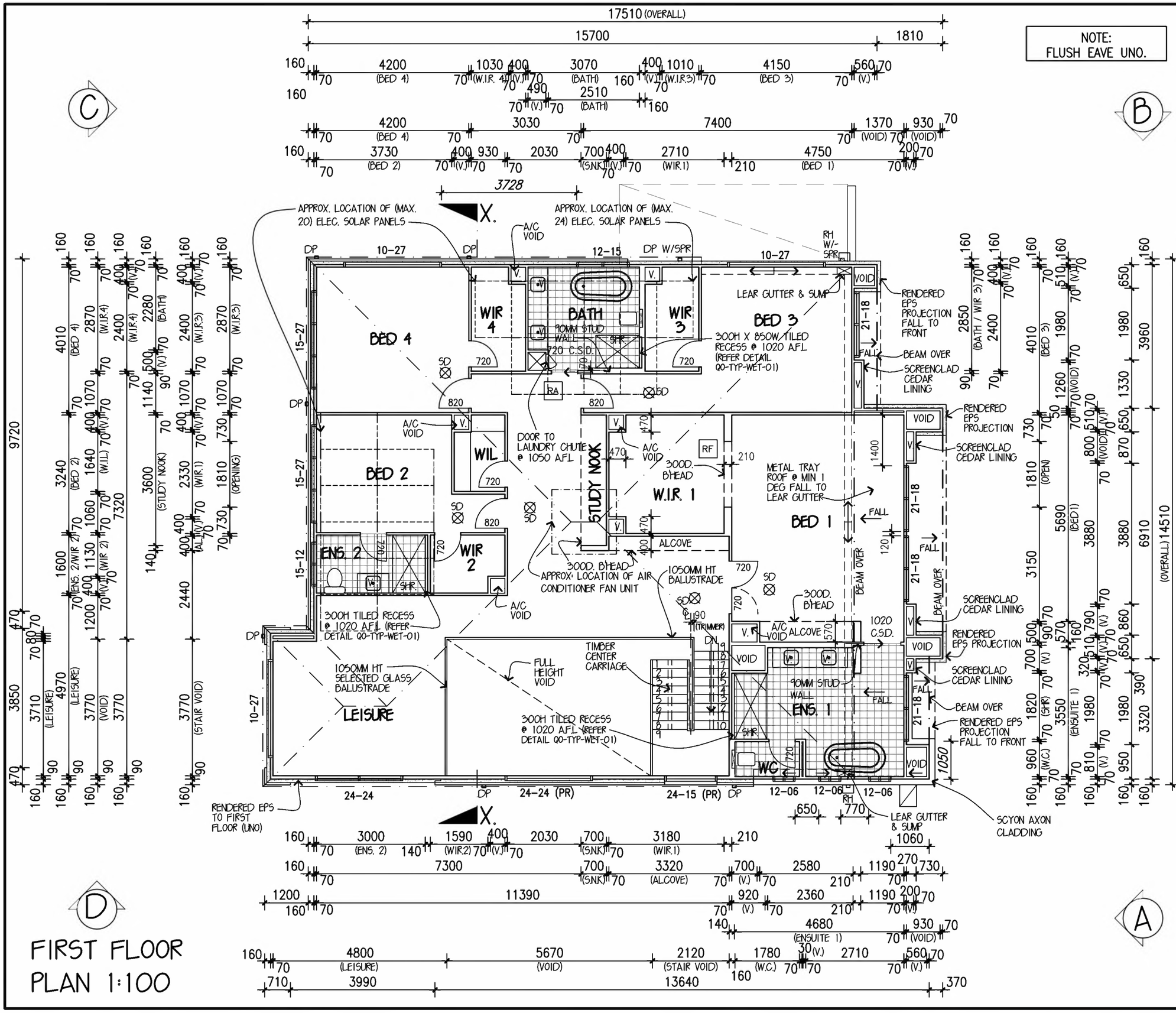

FIRST FLOOR PLAN 1:100

NOTE: CENTRE ALL WINDOWS & EXTERNAL DOORS INTERNALLY TO ROOM (U.N.O.) INTERNAL HINGED DOORS TO BE CENTRED TO THE HALLWAY

NOTE: PROVIDE BUSHFIRE HAZARD REQUIREMENTS

NOTE:
PROVIDE BLUE H2-F TREATED TIMBER FRAME & TRUSSES

NOTE:
2340mm HIGH INTERNAL DOORS THROUGHOUT U.N.O.

NOTE: (QLD ONLY)
FIRST FLOOR JOISTS UNDER ALL SHOWERS TO BE STEPPED DOWN 50mm TO SUIT FLUSH FLOORING FINISH TO WET AREAS. REFER DETAIL "QS-TYP-SHOW-02".

NOTE: PROVIDE CONCEALED WC "IN WALL" CISTERN, WITHIN 90mm DEEP WALL FRAME (U.N.O.) TO P'DR 1, ENS WC & BATH.

DESIGN: WATERFORD 53

FACADE: MODE CEILING: 30, R

GARAGE: DOUBLE

FLOOR PLAN

METRICON HOMES OWNS COPYRIGHT IN THIS DRAWING. UNAUTHORISED USE, REPRODUCTION OR ADAPTION IS FORBIDDEN AND WILL BE PROSECUTED.

DESIGNER metricon

BY METRICON

Suite 20 Level 2 Riverwalk Place, 238 Robina Town Centre Drive, Robina, QLD Tel: 07 5501 7200 Fax: 07 5562 2194.
Metricon Homes QLD Pty Ltd is licensed under the QBCC Act 1991 (QBCC Licence 40992), NSW Builders License 36654C.
COPYRIGHT 2009 reproduction forbidden. Unathorised use, reproduction or adoption is forbidden and will be prosecuted.

OWNER: C. PAN & X. MA
LOT 801 KATE CIRCUIT
ROCHEDALE

JOB NO: 701444 MST VER: APRIL 2019

PERMIT No: 00060205 DWS: 48.29

CONSTRUCTION
DATE : 18.06.20 ROO

SHEET: 3 of 12

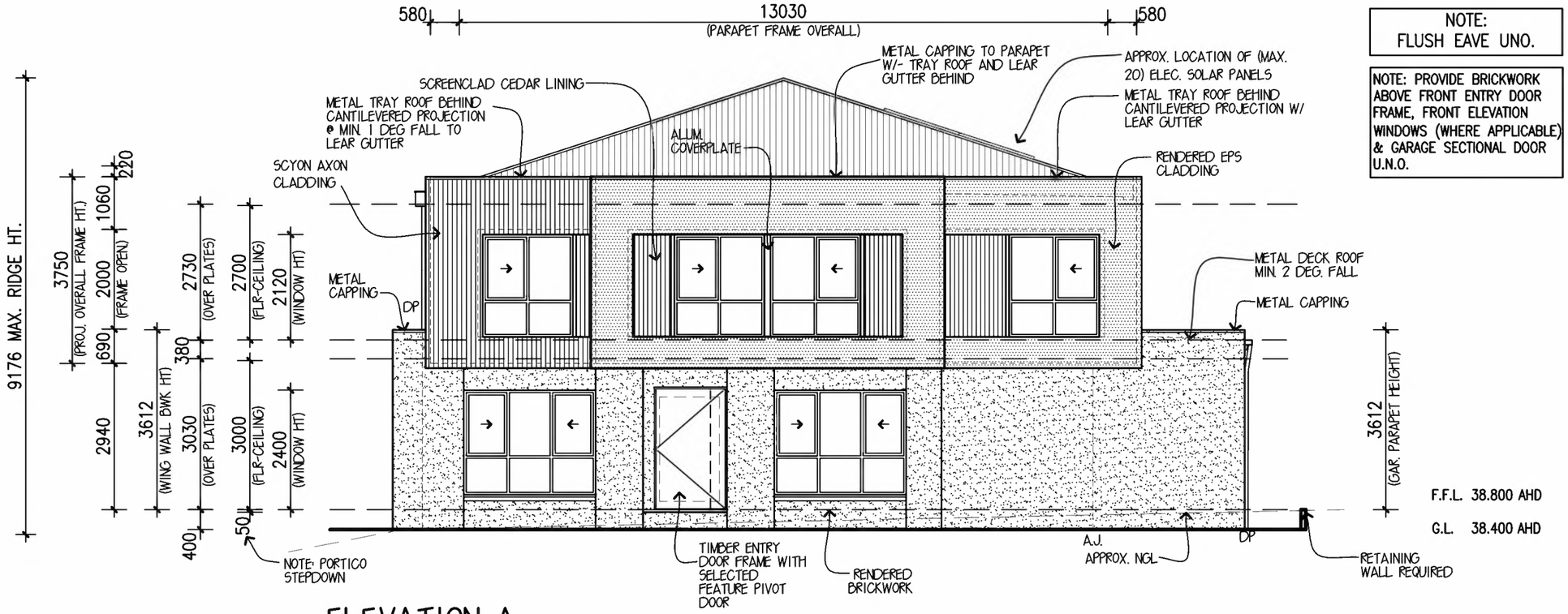

ELEVATION A.

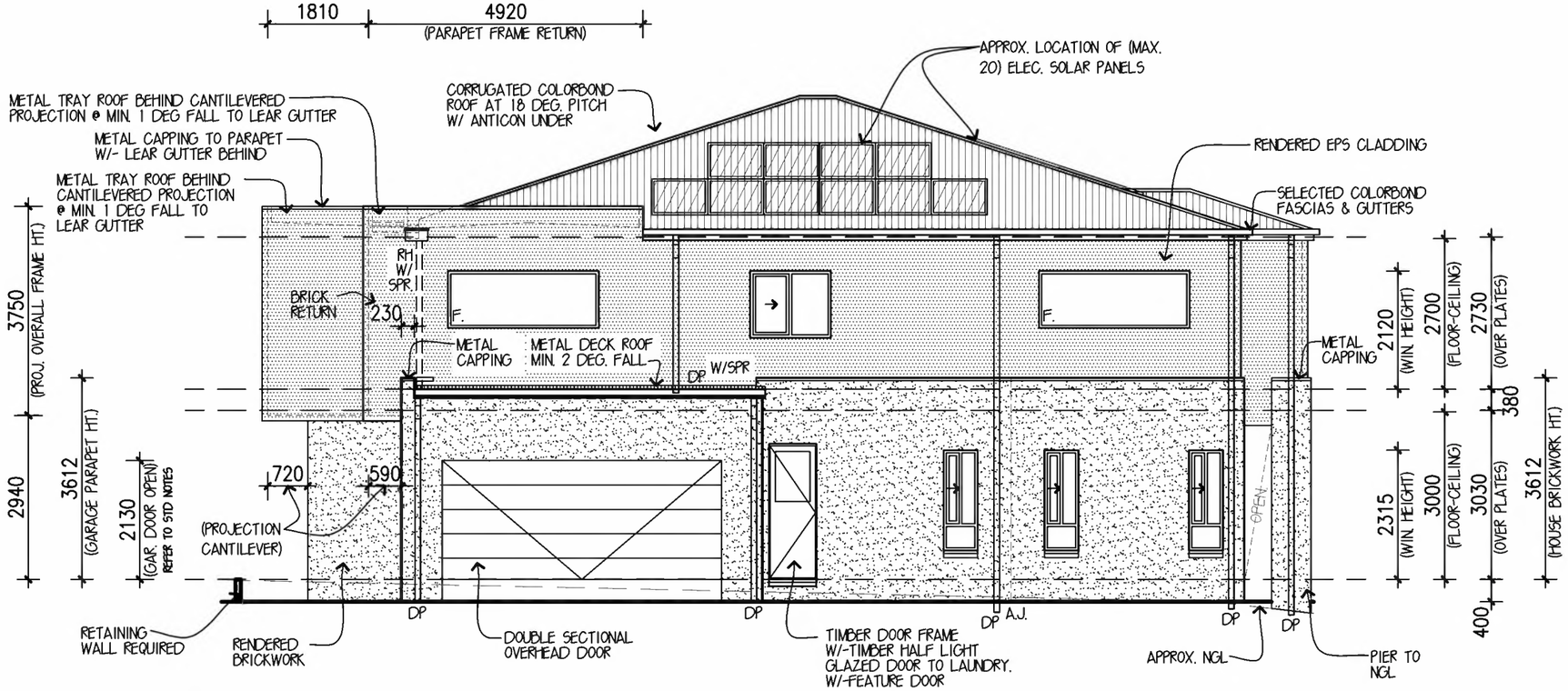

ELEVATION B.

ELEVATIONS 1:100

NOTE: FLUSH EAVE UNO.

NOTE: PROVIDE BRICKWORK ABOVE FRONT ENTRY DOOR FRAME, FRONT ELEVATION WINDOWS (WHERE APPLICABLE) & GARAGE SECTIONAL DOOR U.N.O.

NOTE: PROVIDE BUSHFIRE HAZARD REQUIREMENTS

NOTE: PROVIDE BLUE H2-F TREATED TIMBER FRAME & TRUSSES

NOTE: PROVIDE SELECTED SCREENS TO ALL OPENING WINDOWS & HINGED EXTERNAL DOORS

DESIGN: WATERFORD 53

FACADE: MODE CEILING: 30, R

GARAGE: DOUBLE

ELEVATIONS

METRICON HOMES OWNS COPYRIGHT IN THIS DRAWING. UNAUTHORISED USE, REPRODUCTION OR ADAPTION IS FORBIDDEN AND WILL BE PROSECUTED.

DESIGNER metricon

BY METRICON

Suite 20 Level 2 Riverwalk Place, 238 Robina Town Centre Drive, Robina, QLD Tel: 07 5501 7200 Fax: 07 5562 2194.
Metricon Homes QLD Pty Ltd is licensed under the QBCC Act 1991 (QBCC Licence 40992), NSW Builders License 36654C.
COPYRIGHT 2009 reproduction forbidden. Unathorised use, reproduction or adoption is forbidden and will be prosecuted.

OWNER: C. PAN & X. MA

LOT 801 KATE CIRCUIT ROCHEDALE

JOB NO: 701444 MST VER: APRIL 2019

PERMIT No: 00060205 DWS: 48.29

CONSTRUCTION

DATE : 18.06.20 ROO

SHEET: 4 of 12

NOTE:
FLUSH EAVE UNO.

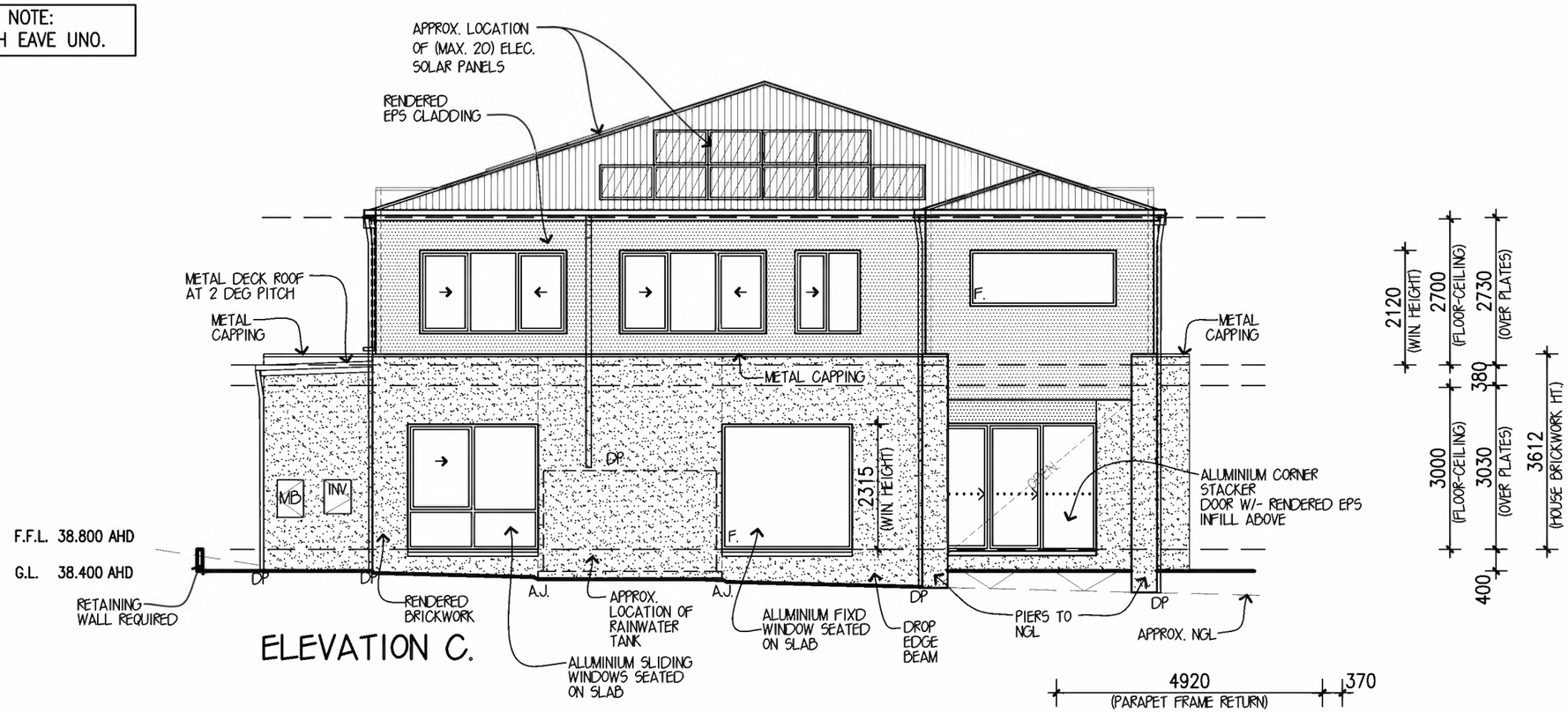

ELEVATION C.

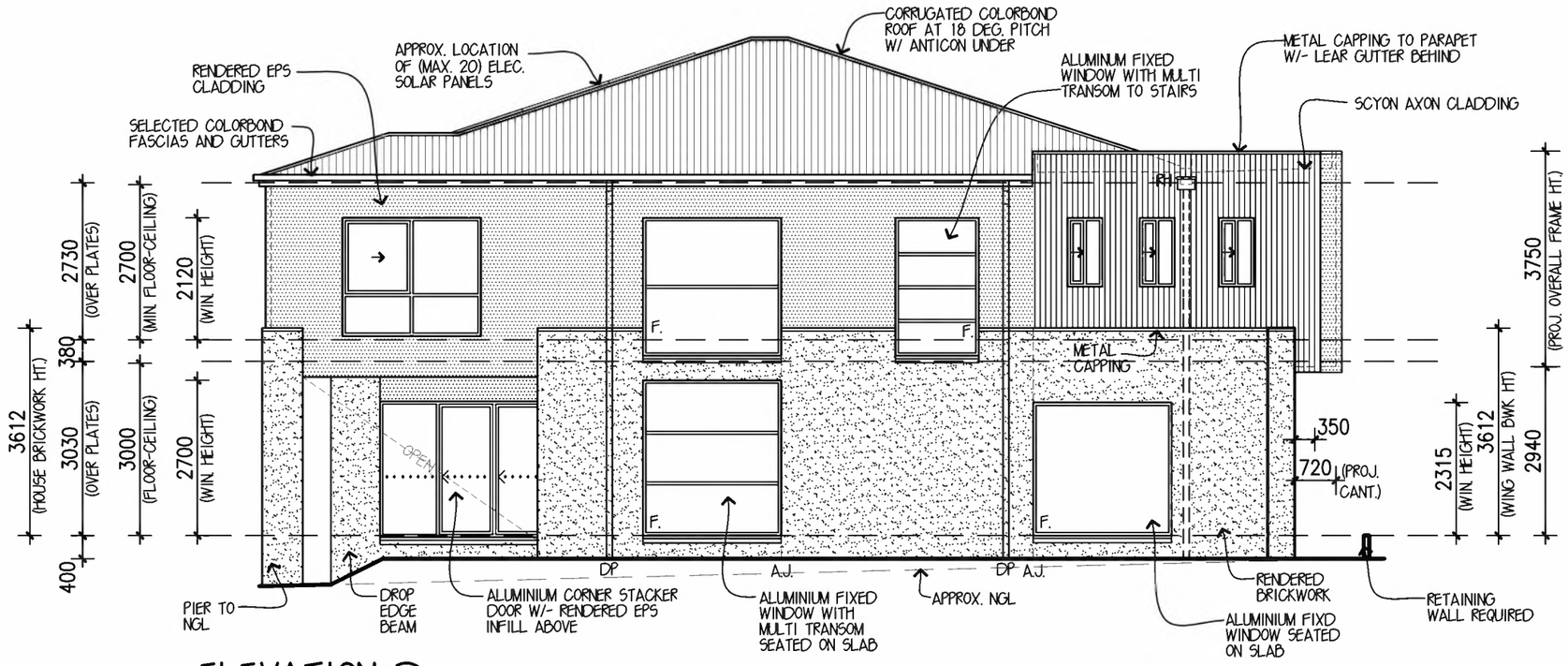

ELEVATION D.

ELEVATIONS 1:100

NOTE: PROVIDE BUSHFIRE HAZARD REQUIREMENTS

NOTE:
PROVIDE BLUE H2-F TREATED TIMBER FRAME & TRUSSES

NOTE:
PROVIDE SELECTED SCREENS TO ALL OPENING WINDOWS & HINGED EXTERNAL DOORS

DESIGN: WATERFORD 53
FACADE: MODE CEILING: 30, R
GARAGE: DOUBLE

ELEVATIONS

METRICON HOMES OWNS COPYRIGHT IN THIS DRAWING. UNAUTHORISED USE, REPRODUCTION OR ADAPTION IS FORBIDDEN AND WILL BE PROSECUTED.

DESIGNER metricon

BY METRICON

Suite 20 Level 2 Riverwalk Place, 238 Robina Town Centre Drive, Robina, QLD Tel: 07 5501 7200 Fax: 07 5562 2194.
Metricon Homes QLD Pty Ltd is licensed under the QBCC Act 1991 (QBCC Licence 40992), NSW Builders License 36654C.
COPYRIGHT 2009 reproduction forbidden. Unathorised use, reproduction or adaption is forbidden and will be prosecuted.

OWNER: C. PAN & X. MA
LOT 801 KATE CIRCUIT
ROCHEDALE

JOB NO: 701444 MST VER: APRIL 2019
PERMIT No: 00060205 DWS: 48.29

CONSTRUCTION
DATE : 18.06.20 ROO

SHEET: 5 of 12

NOTE:
FLUSH EAVE UNO.

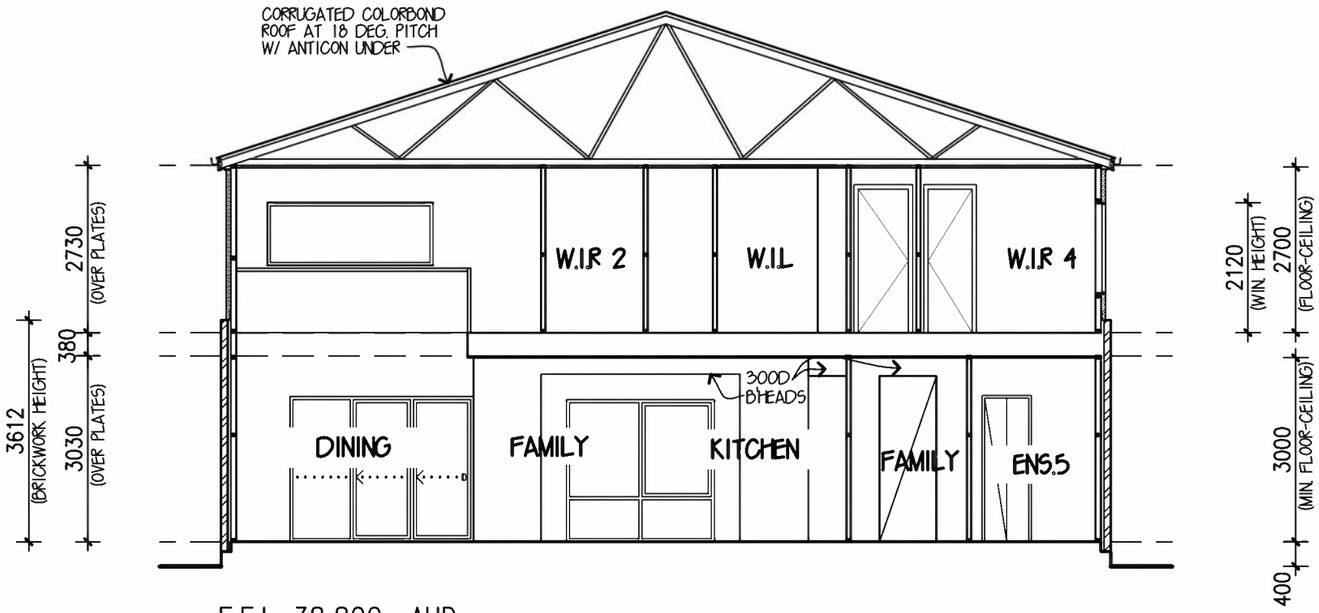

F.F.L. 38.800 AHD
WAFFLE POD SLAB
G.L.38.400 AHD
NOTE: REFER ENGINEER'S FOOTING DESIGN.

SOIL CLASSIFICATION 'H2'
REFER SOIL REPORT (REF. NO 177564)

SECTION X-X

SECTION 1:100

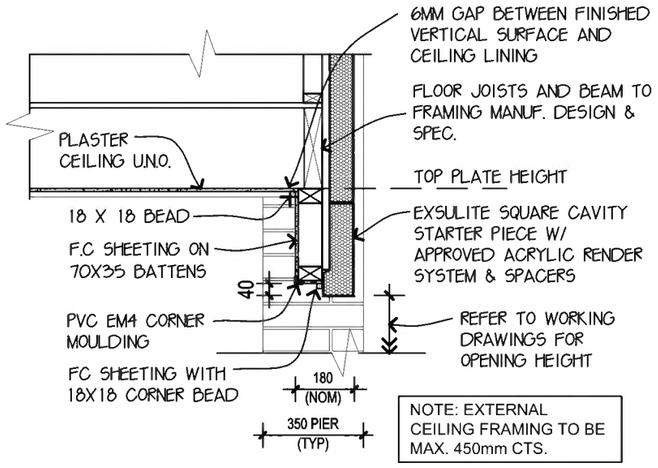

NOTE: EXTERNAL CEILING FRAMING TO BE MAX. 450mm CTS.

HIGHSET OPENING DETAIL
OUTDOOR ROOM - BRICKWORK PIER
EPS CLADDING OVER OPENING
N.T.S.

DESIGN: WATERFORD 53
FACADE: MODE CEILING: 30, R
GARAGE: DOUBLE

SECTION

METRICON HOMES OWNS COPYRIGHT IN THIS DRAWING. UNAUTHORISED USE, REPRODUCTION OR ADAPTION IS FORBIDDEN AND WILL BE PROSECUTED.

DESIGNER metricon

BY METRICON

Suite 20 Level 2 Riverwalk Place, 238 Robina Town Centre Drive, Robina, QLD Tel: 07 5501 7200 Fax: 07 5562 2194.
Metricon Homes QLD Pty Ltd is licensed under the QBCC Act 1991 (QBCC Licence 40992), NSW Builders License 36654C.
COPYRIGHT 2009 reproduction forbidden. Unathorised use, reproduction or adoption is forbidden and will be prosecuted.

OWNER: C. PAN & X. MA
LOT 801 KATE CIRCUIT
ROCHEDALE

JOB NO: 701444 MST VER: APRIL 2019
PERMIT No: 00060205 DWS: 4829
CONSTRUCTION
DATE : 18.06.20 ROO
SHEET: 6 of 12

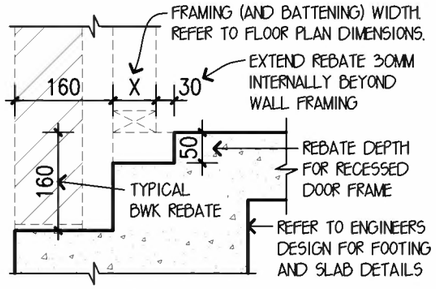

CONC. SLAB REBATE
RECESSED DOOR FRAME
SCALE 1:10

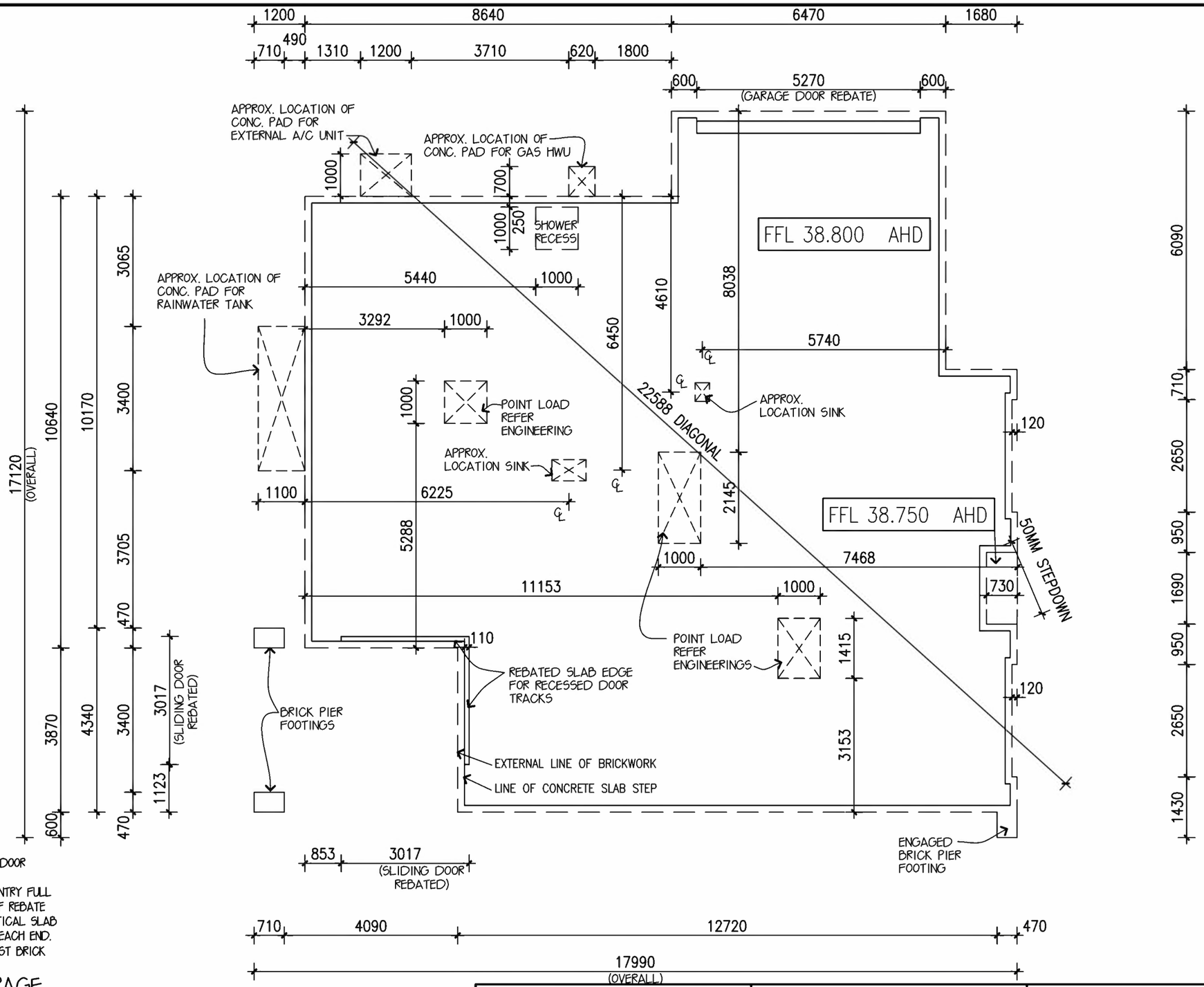

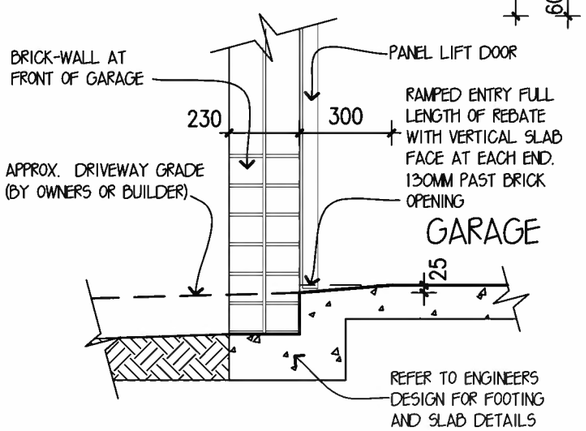

GARAGE DOOR REBATE/END DETAIL
SCALE 1:20

SLAB PLAN 1:100

DESIGN: WATERFORD 53
FACADE: MODE CEILING: 30, R
GARAGE: DOUBLE

SLAB PLAN

METRICON HOMES OWNS COPYRIGHT IN THIS DRAWING. UNAUTHORISED USE, REPRODUCTION OR ADAPTION IS FORBIDDEN AND WILL BE PROSECUTED.

DESIGNER | metricon

BY METRICON

Suite 20 Level 2 Riverwalk Place, 238 Robina Town Centre Drive, Robina, QLD Tel: 07 5501 7200 Fax: 07 5562 2194.
Metricon Homes QLD Pty Ltd is licensed under the QBCC Act 1991 (QBCC Licence 40992), NSW Builders License 36654C.
COPYRIGHT 2019 reproduction forbidden. Unathorised use, reproduction or adaption is forbidden and will be prosecuted.

OWNER: C. PAN & X. MA
LOT 801 KATE CIRCUIT
ROCHEDALE

JOB NO: 701444 MST VER: APRIL 2019
PERMIT No: 00060205 DWS: 48.29
CONSTRUCTION
DATE : 18.06.20 BOO
SHEET: 7 of 12

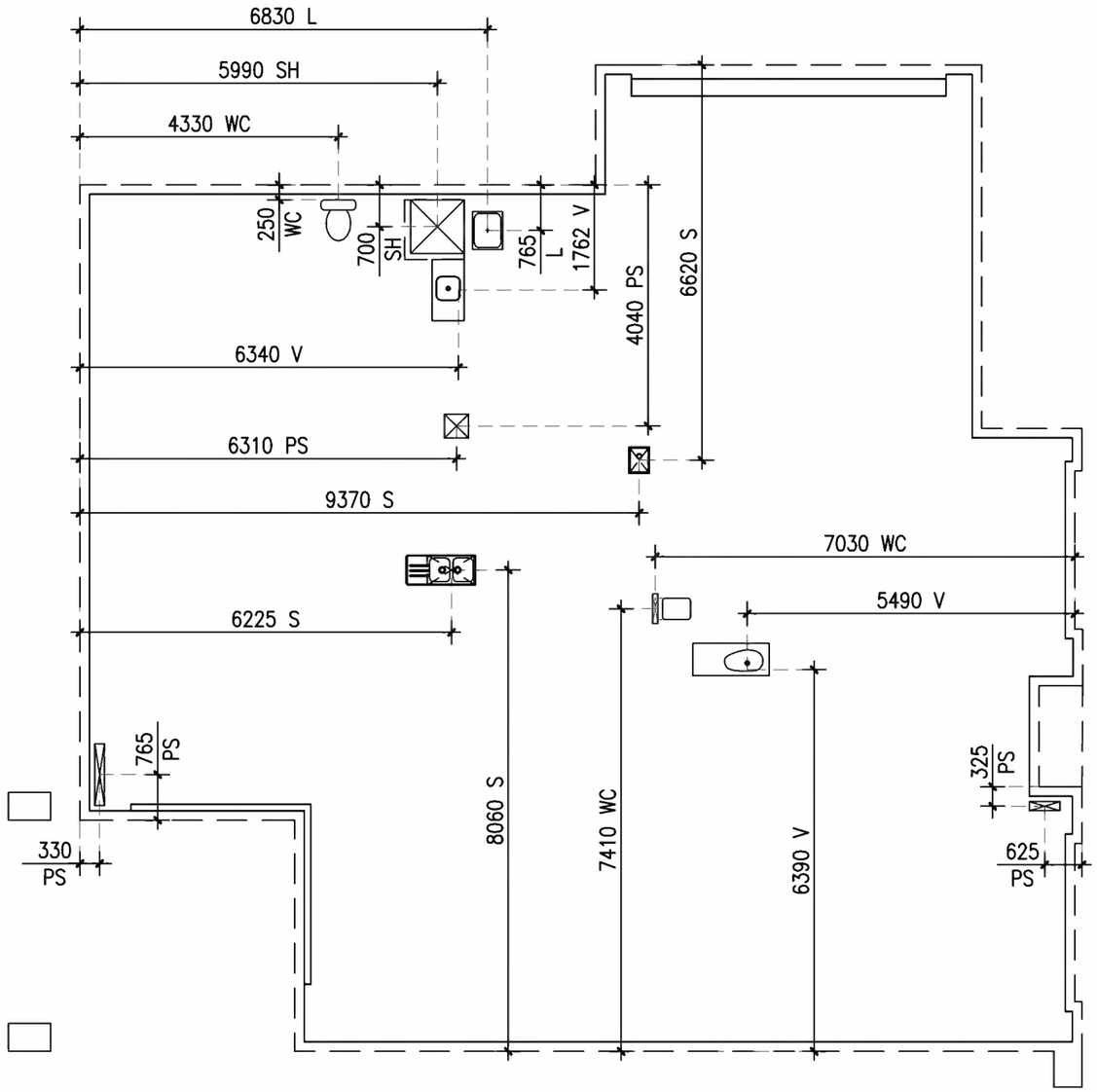

QA SLAB LAYOUT PLAN 1:100

INTERNAL PLUMBING LAYOUT - DIMENSIONS LEGEND:

NOTE: SPECIFIC LOCATION OF REQUIRED PLUMBING POINTS MUST BE DETERMINED IN CONJUNCTION WITH PRODUCT SPECIFICATIONS, COLOUR SELECTION AND CONTRACT.

V = VANITY BASIN (NOTE: WASTE IS DIMENSIONED AS 100MM OFF WALL AS STD)
WC = CENTRELINE TOILET (NOTE: WASTE POINT IS DIMENSIONED HARD AGAINST WALL AS STD)
B = CENTRELINE BATH (NOTE: WASTE POINT IS INDICATIVE ONLY - REFER TO SPECS TO CLARIFY)
PS = CENTRELINE PLUMBING STACK
SH = CENTRELINE SHOWER BASE
S = CENTRELINE KITCHEN SINK BOWLS
L = CENTRELINE LAUNDRY TUB

DESIGN: WATERFORD 53
FACADE: MODE CEILING: 30, R
GARAGE: DOUBLE

QA SLAB PLAN

METRICON HOMES OWNS COPYRIGHT IN THIS DRAWING. UNAUTHORISED USE, REPRODUCTION OR ADAPTION IS FORBIDDEN AND WILL BE PROSECUTED.

DESIGNER | metricon

BY METRICON

Suite 20 Level 2 Riverwalk Place, 238 Robina Town Centre Drive, Robina, QLD Tel: 07 5501 7200 Fax: 07 5562 2194.
Metricon Homes QLD Pty Ltd is licensed under the QBCC Act 1991 (QBCC Licence 40992), NSW Builders License 36654C.
COPYRIGHT 2009 reproduction forbidden. Unathorised use, reproduction or adaption is forbidden and will be prosecuted.

OWNER: C. PAN & X. MA
LOT 801 KATE CIRCUIT
ROCHEDALE

JOB NO: 701444 MST VER: APRIL 2019
PERMIT No: 00060205 DWS: 48.29
CONSTRUCTION
DATE : 18.06.20 ROO
SHEET: 7A of 12

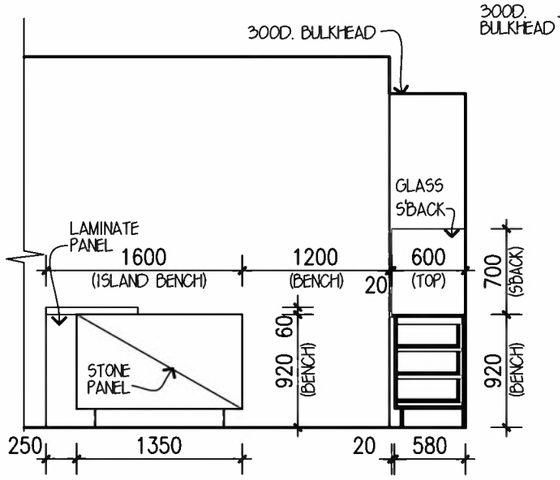

ELEVATION A
KITCHEN

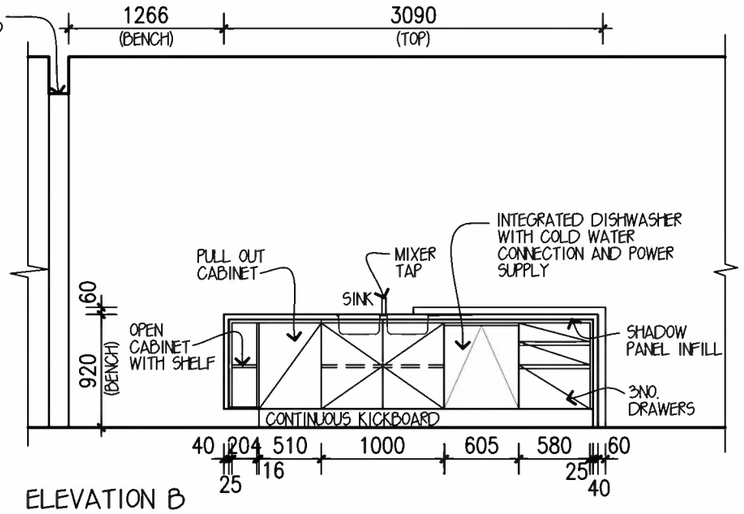

ELEVATION B

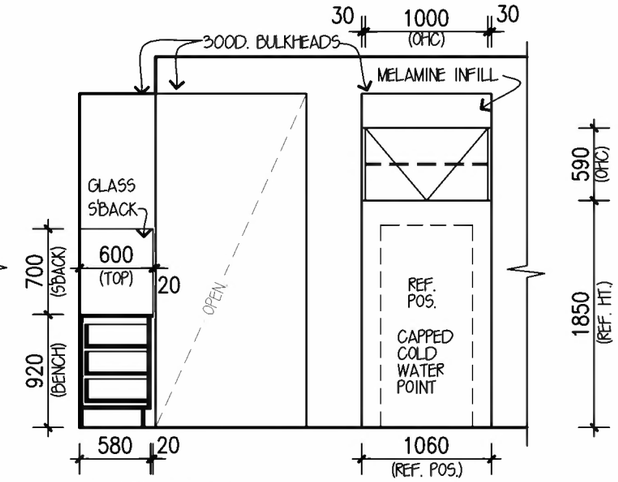

ELEVATION C

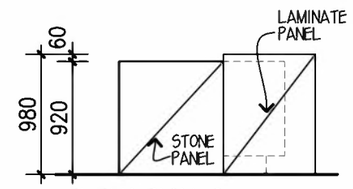

ELEVATION C
KITCHEN ISLAND

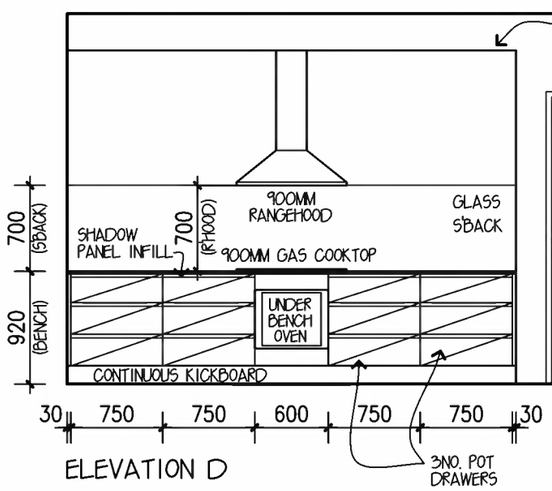

ELEVATION D
KITCHEN

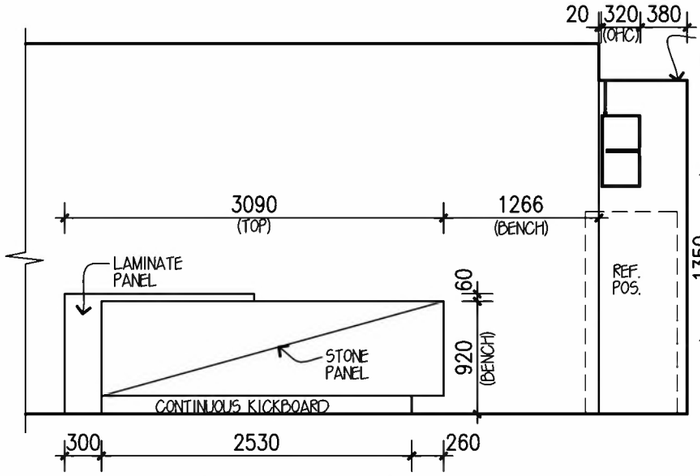

ELEVATION D (ISLAND BENCH)

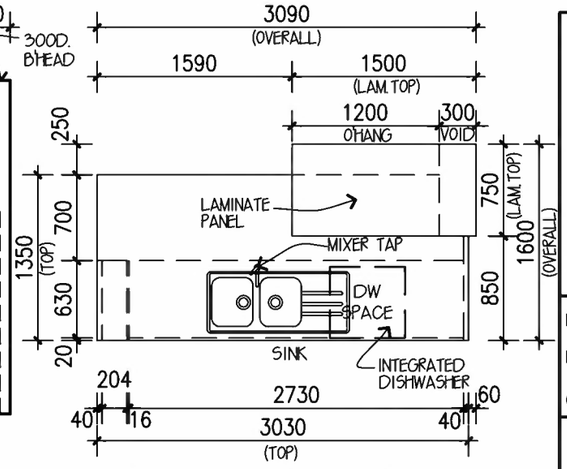

KITCHEN ISLAND BENCH DETAIL

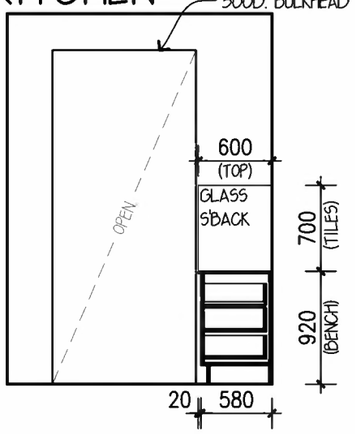

ELEVATION A
PANTRY
INTERNALS 1:50

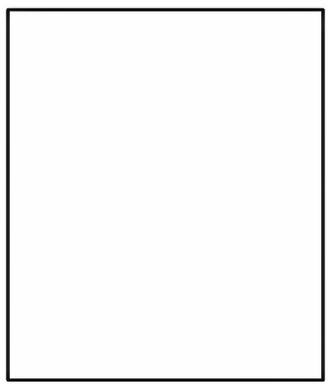

ELEVATION B

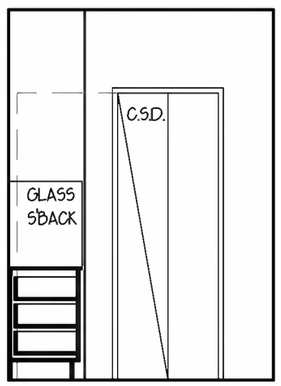

ELEVATION C

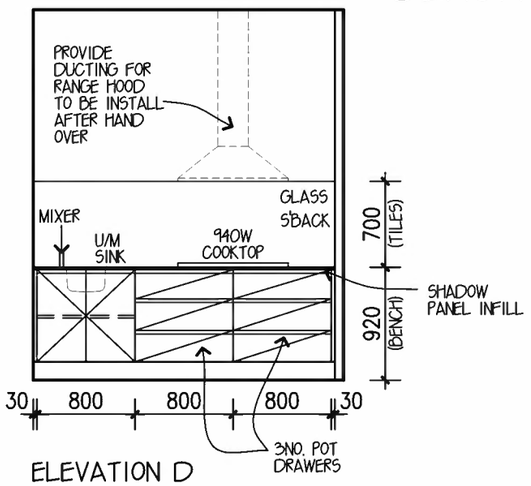

ELEVATION D

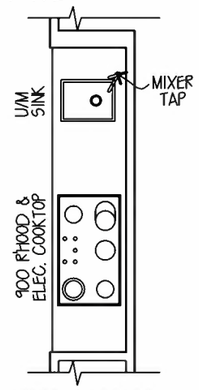

SINK-BENCH PLAN VIEW
PANTRY

NOTE:
PROVIDE SELECTED STONE BENCH TOP TO BUTLER'S PANTRY WITH 40mm MITRED EDGE.

NOTE:
PROVIDE SELECTED STONE BENCH TOP TO KITCHEN WITH 40mm MITRED EDGE.

NOTE:
PROVIDE SELECTED STONE BENCH TOP TO KITCHEN ISLAND BENCH WITH 40mm MITRED EDGE & GABLE ENDS

NOTES:

- INTERNAL HEIGHT DIMENSIONS ARE TAKEN FROM F.F.L.
- INTERNAL DIMENSIONS ARE TAKEN FROM PLASTER.
- TILE & CUPBOARD DIMENSIONS ARE APPROXIMATE ONLY & MAY BE ALTERED TO SUIT MODULAR SIZES.
- ALL DIMENSIONS ARE SUBJECT TO SITE MEASURE.
- SHOWER SCREEN HEIGHTS ARE INDICATIVE ONLY AND WILL ALTER DEPENDING ON SHOWER BASE CONSTRUCTION METHODS.
- BENCHTOPS AND ISLAND BENCH BACK PANELS MAY HAVE A JOIN DEPENDANT ON LENGTH & CONFIGURATION, POSITIONED AT THE MANUFACTURERS DISCRETION.
- PROFILE LINES DRAWN ON CABINETRY ARE INDICATIVE ONLY, REFER TO COLOUR SELECTION.

DESIGN: WATERFORD 53
FACADE: MODE CEILING: 30, R
GARAGE: DOUBLE

INTERNAL ELEVATIONS

METRICON HOMES OWNS COPYRIGHT IN THIS DRAWING. UNAUTHORISED USE, REPRODUCTION OR ADAPTION IS FORBIDDEN AND WILL BE PROSECUTED.

DESIGNER metricon

BY METRICON

Suite 20 Level 2 Riverwalk Place, 238 Robina Town Centre Drive, Robina, QLD Tel: 07 5501 7200 Fax: 07 5562 2194.
Metricon Homes QLD Pty Ltd is licensed under the QBCC Act 1991 (QBCC Licence 40992), NSW Builders License 36654C.
COPYRIGHT 2009 reproduction forbidden. Unathorised use, reproduction or adoption is forbidden and will be prosecuted.

OWNER: C. PAN & X. MA
LOT 801 KATE CIRCUIT
ROCHEDALE

JOB NO: 701444 MST VER: APRIL 2019
PERMIT No: 00060205 DWS: 48.29
CONSTRUCTION
DATE : 18.06.20 ROO
SHEET: 8 of 12

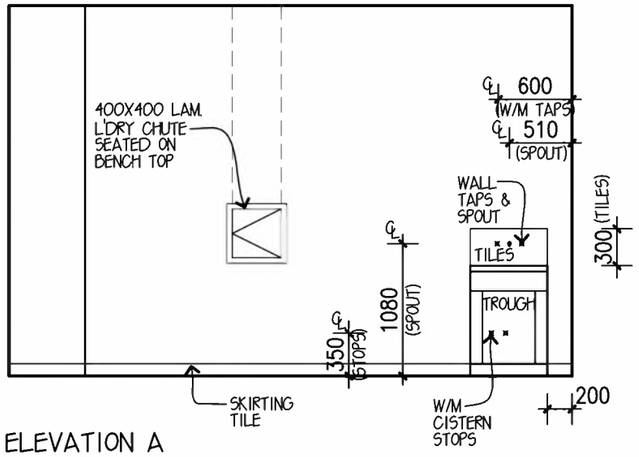

ELEVATION A
LAUNDRY

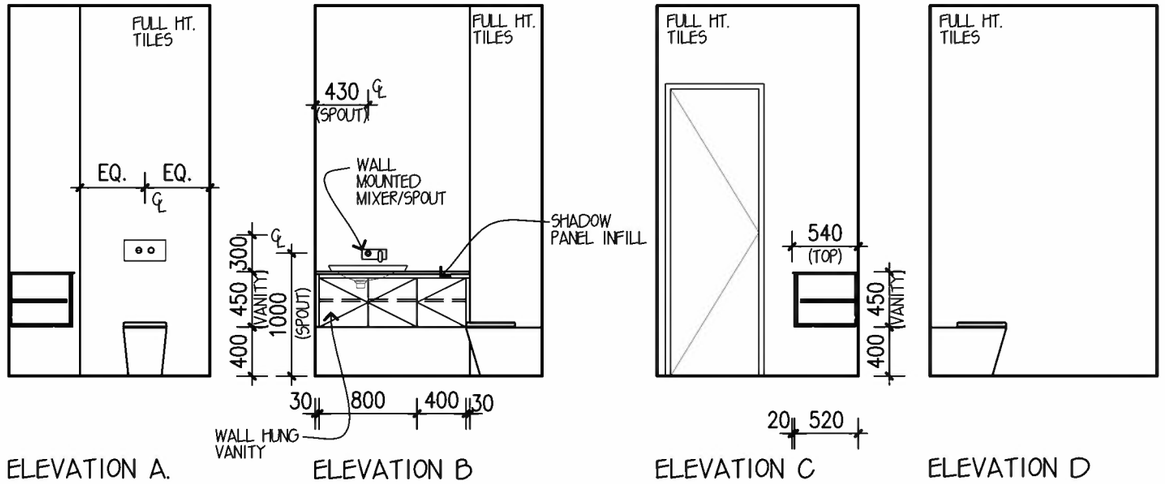

ELEVATION A. ELEVATION B ELEVATION C ELEVATION D
PDR. 1

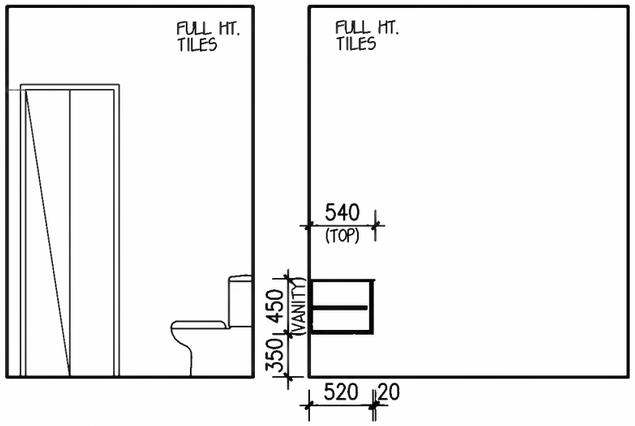

ELEVATION A ELEVATION B
ENS. 5

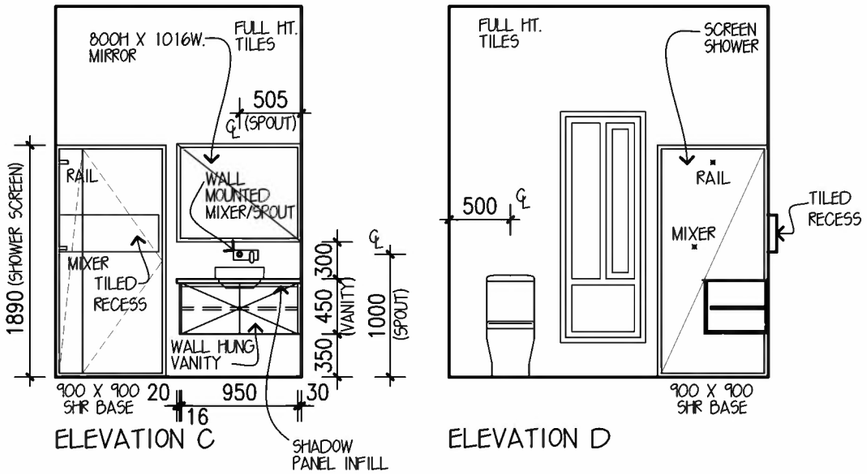

ELEVATION C ELEVATION D

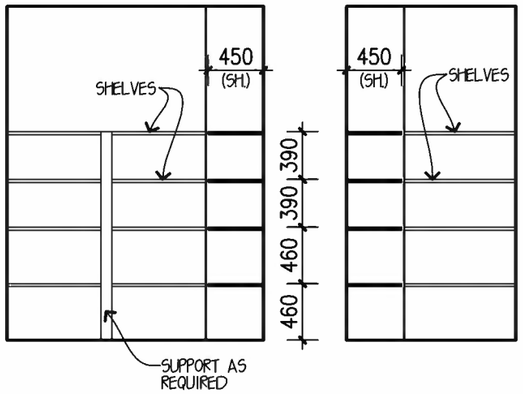

ELEVATION A ELEVATION D
W.I.L.1

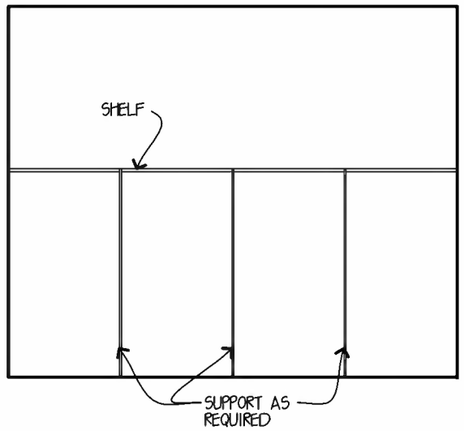

ELEVATION C
BROOM

INTERNALS 1:50

NOTE:
PROVIDE SELECTED STONE BENCH TOP TO VANITIES WITH 20mm EDGE.

NOTES:

- INTERNAL HEIGHT DIMENSIONS ARE TAKEN FROM F.F.L.
- INTERNAL DIMENSIONS ARE TAKEN FROM PLASTER.
- TILE & CUPBOARD DIMENSIONS ARE APPROXIMATE ONLY & MAY BE ALTERED TO SUIT MODULAR SIZES.
- ALL DIMENSIONS ARE SUBJECT TO SITE MEASURE.
- SHOWER SCREEN HEIGHTS ARE INDICATIVE ONLY AND WILL ALTER DEPENDING ON SHOWER BASE CONSTRUCTION METHODS.
- BENCHTOPS AND ISLAND BENCH BACK PANELS MAY HAVE A JOIN DEPENDANT ON LENGTH & CONFIGURATION, POSITIONED AT THE MANUFACTURERS DISCRETION.
- PROFILE LINES DRAWN ON CABINETRY ARE INDICATIVE ONLY, REFER TO COLOUR SELECTION.

DESIGN: WATERFORD 53
FACADE: MODE CEILING: 30, R
GARAGE: DOUBLE

INTERNAL ELEVATIONS

METRICON HOMES OWNS COPYRIGHT IN THIS DRAWING. UNAUTHORISED USE, REPRODUCTION OR ADAPTION IS FORBIDDEN AND WILL BE PROSECUTED.

DESIGNER metricon

BY METRICON

Suite 20 Level 2 Riverwalk Place, 238 Robina Town Centre Drive, Robina, QLD Tel: 07 5501 7200 Fax: 07 5562 2194.
Metricon Homes QLD Pty Ltd is licensed under the QBCC Act 1991 (QBCC Licence 40992), NSW Builders License 36654C.
COPYRIGHT 2009 reproduction forbidden. Unathorised use, reproduction or adoption is forbidden and will be prosecuted.

OWNER: C. PAN & X. MA
LOT 801 KATE CIRCUIT
ROCHEDALE

JOB NO: 701444 MST VER: APRIL 2019
PERMIT No: 00060205 DWS: 4829
CONSTRUCTION
DATE : 18.06.20 ROO
SHEET: 9 of 12

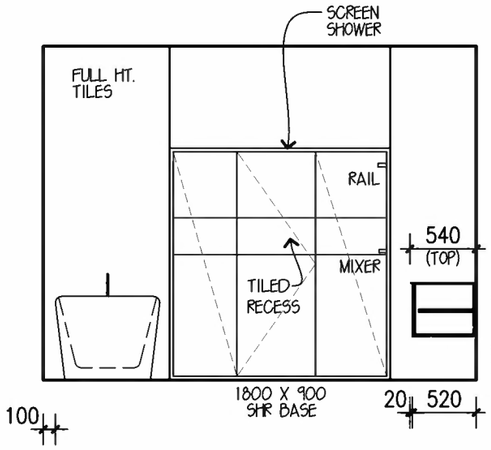

ELEVATION A
ENSUITE

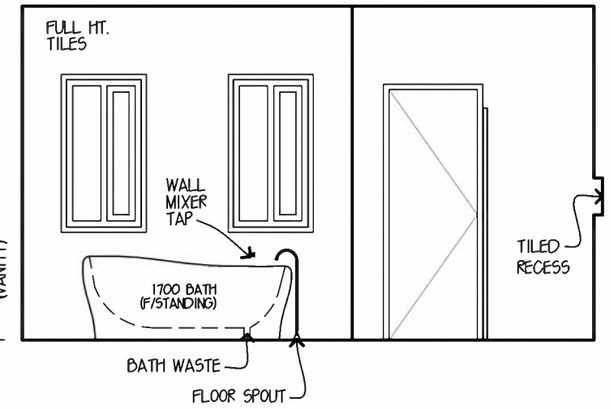

ELEVATION B

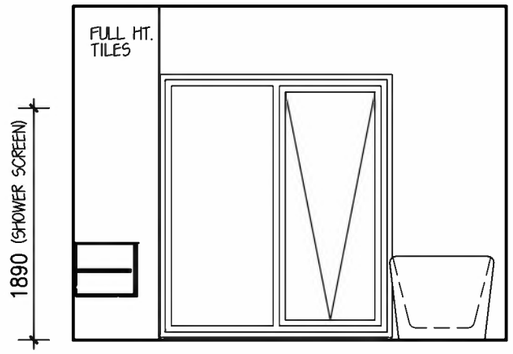

ELEVATION C

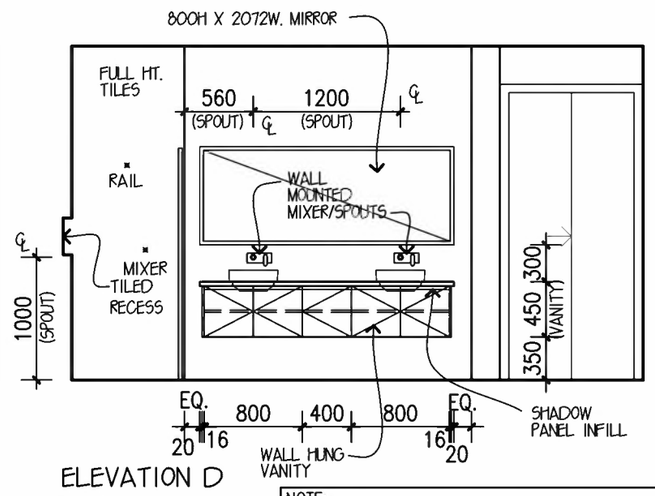

ELEVATION D

NOTE:
PROVIDE SELECTED STONE BENCH TOP TO VANITIES WITH 20mm EDGE.

NOTES:

* INTERNAL HEIGHT DIMENSIONS ARE TAKEN FROM F.F.L.
* INTERNAL DIMENSIONS ARE TAKEN FROM PLASTER.
* TILE & CUPBOARD DIMENSIONS ARE APPROXIMATE ONLY & MAY BE ALTERED TO SUIT MODULAR SIZES.
* ALL DIMENSIONS ARE SUBJECT TO SITE MEASURE.
* SHOWER SCREEN HEIGHTS ARE INDICATIVE ONLY AND WILL ALTER DEPENDING ON SHOWER BASE CONSTRUCTION METHODS.
* BENCHTOPS AND ISLAND BENCH BACK PANELS MAY HAVE A JOIN DEPENDANT ON LENGTH & CONFIGURATION, POSITIONED AT THE MANUFACTURERS DISCRETION.
* PROFILE LINES DRAWN ON CABINETRY ARE INDICATIVE ONLY, REFER TO COLOUR SELECTION.

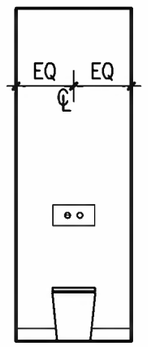

ELEVATION A
ENS. WC

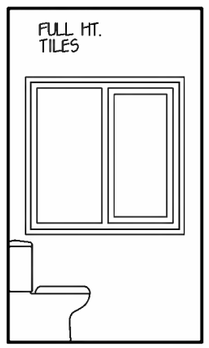

ELEVATION A
ENS. 2

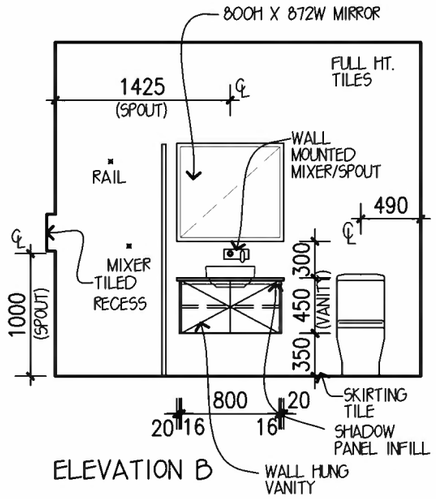

ELEVATION B

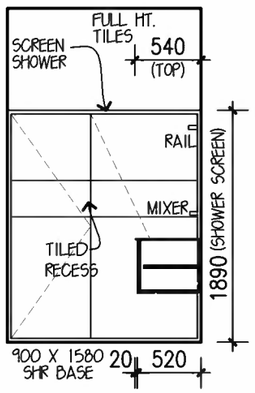

ELEVATION C

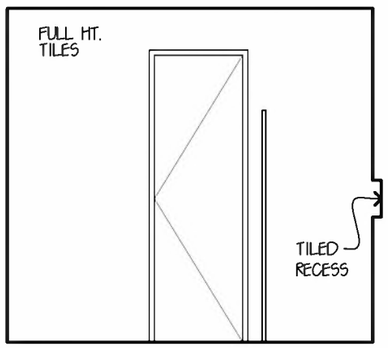

ELEVATION D

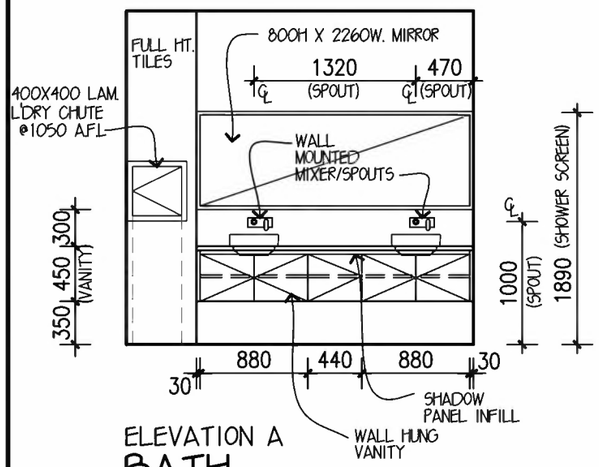

ELEVATION A
BATH

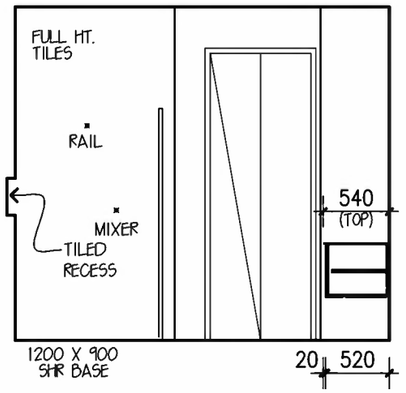

ELEVATION B

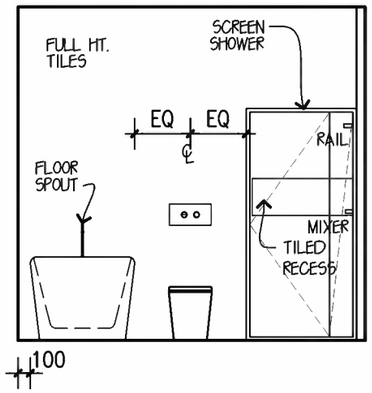

ELEVATION C

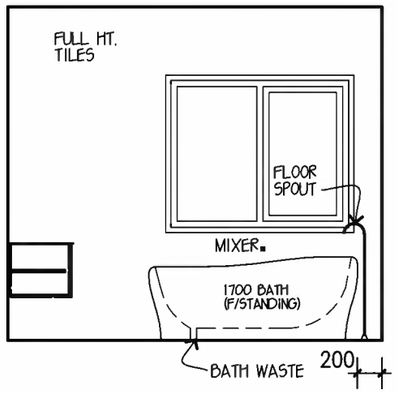

ELEVATION D

INTERNALS 1:50

DESIGN: WATERFORD 53

FACADE: MODE CEILING: 30, R

GARAGE: DOUBLE

INTERNAL ELEVATIONS

METRICON HOMES OWNS COPYRIGHT IN THIS DRAWING. UNAUTHORISED USE, REPRODUCTION OR ADAPTION IS FORBIDDEN AND WILL BE PROSECUTED.

DESIGNER | metricon

BY METRICON

Suite 20 Level 2 Riverwalk Place, 238 Robina Town Centre Drive, Robina, QLD Tel: 07 5501 7200 Fax: 07 5562 2194.
Metricon Homes QLD Pty Ltd is licensed under the QBCC Act 1991 (QBCC Licence 40992), NSW Builders License 36654C.
COPYRIGHT 2009 reproduction forbidden. Unathorised use, reproduction or adoption is forbidden and will be prosecuted.

OWNER: C. PAN & X. MA
LOT 801 KATE CIRCUIT
ROCHEDALE

JOB NO: 701444 MST VER: APRIL 2019

PERMIT No: 00060205 DWS: 4829

CONSTRUCTION
DATE : 18.06.20 ROO

SHEET: 10 of 12

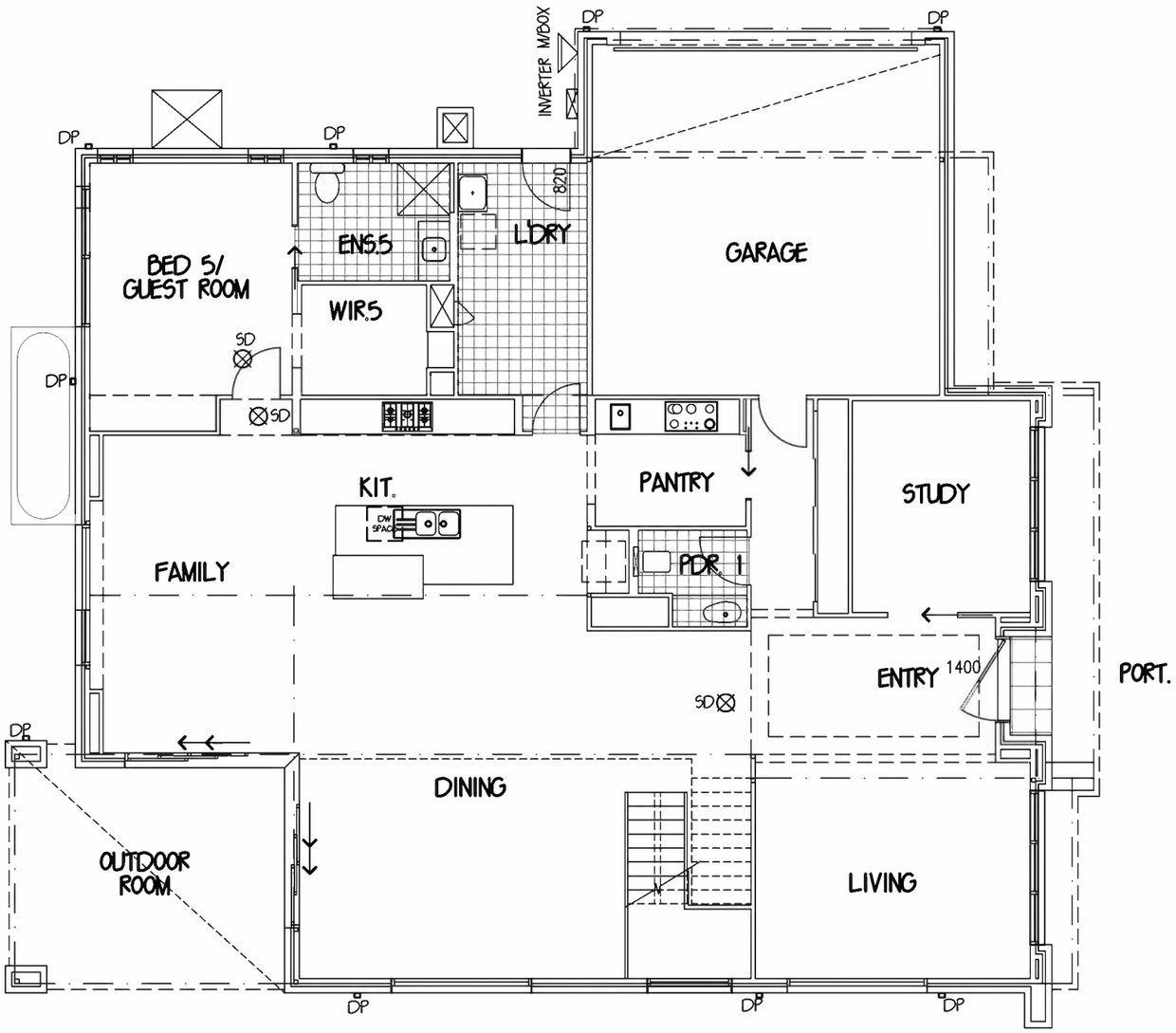

FLOOR COVERINGS LEGEND:

WET AREA TILES = 17.37 SQM

EXTERNAL TILES = 1.22 SQM

GROUND FLOOR COVERING PLAN 1:100

DESIGN: WATERFORD 53
FACADE: MODE CEILING: 30, R
GARAGE: DOUBLE

FLOOR COVERINGS

METRICON HOMES OWNS COPYRIGHT IN THIS DRAWING. UNAUTHORISED USE, REPRODUCTION OR ADAPTION IS FORBIDDEN AND WILL BE PROSECUTED.

DESIGNER | metricon

BY METRICON

Suite 20 Level 2 Riverwalk Place, 238 Robina Town Centre Drive, Robina, QLD Tel: 07 5501 7200 Fax: 07 5562 2194.
Metricon Homes QLD Pty Ltd is licensed under the QBCC Act 1991 (QBCC Licence 40992), NSW Builders License 36654C.
COPYRIGHT 2009 reproduction forbidden. Unathorised use, reproduction or adaption is forbidden and will be prosecuted.

OWNER: C. PAN & X. MA
LOT 801 KATE CIRCUIT
ROCHEDALE

JOB NO: 701444 MST VER: APRIL 2019
PERMIT No: 00060205 DWS: 48.29
CONSTRUCTION
DATE : 18.06.20 R00
SHEET: 11 of 12

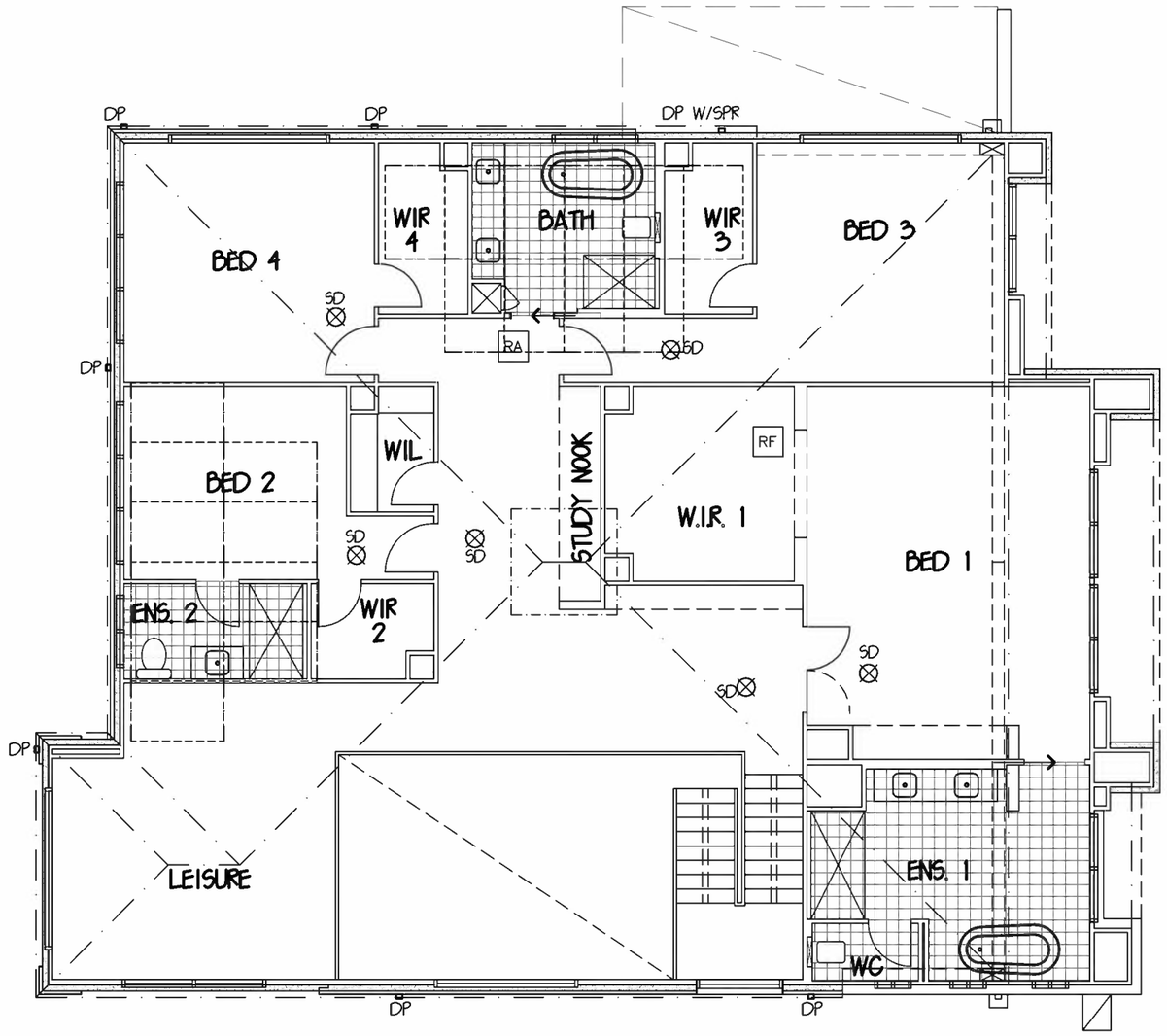

FLOOR COVERINGS LEGEND:

WET AREA
TILES = 28.88 SQM

FIRST FLOOR COVERING PLAN 1:100

DESIGN: WATERFORD 53
FACADE: MODE CEILING: 30, R
GARAGE: DOUBLE

FLOOR COVERINGS

METRICON HOMES OWNS COPYRIGHT IN THIS DRAWING. UNAUTHORISED USE, REPRODUCTION OR ADAPTION IS FORBIDDEN AND WILL BE PROSECUTED.

DESIGNER | metricon

BY METRICON

Suite 20 Level 2 Riverwalk Place, 238 Robina Town Centre Drive, Robina, QLD Tel: 07 5501 7200 Fax: 07 5562 2194.
Metricon Homes QLD Pty Ltd is licensed under the QBCC Act 1991 (QBCC Licence 40992), NSW Builders License 36854C.
COPYRIGHT 2019 reproduction forbidden. Unathorised use, reproduction or adaption is forbidden and will be prosecuted.

OWNER: C. PAN & X. MA
LOT 801 KATE CIRCUIT
ROCHEDALE

JOB NO: 701444 MST VER: APRIL 2019
PERMIT No: 00060205 DWS: 48.29
CONSTRUCTION
DATE : 18.06.20 BOO
SHEET: 12 of 12

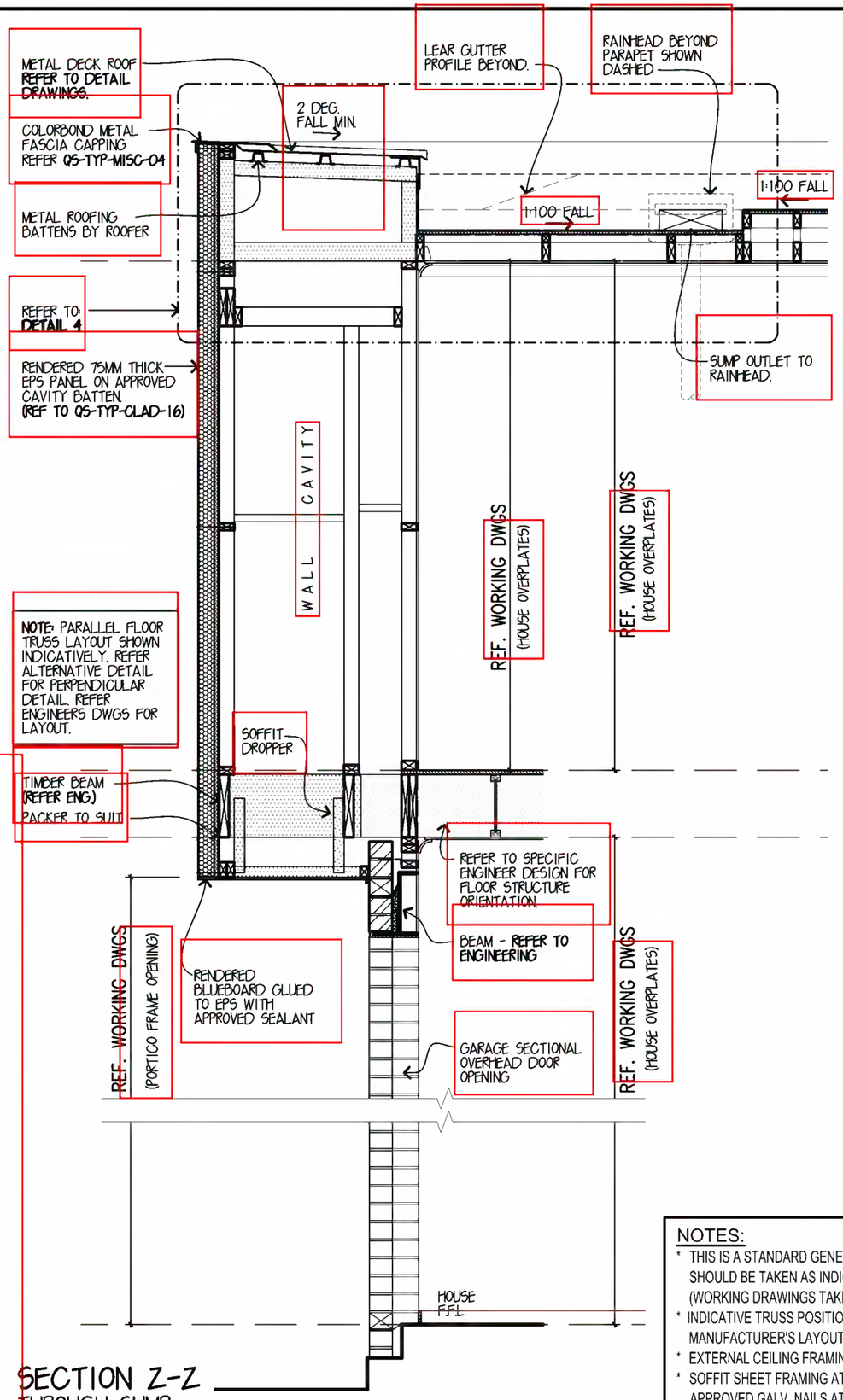

SECTION Z-Z
THROUGH SUMP
SCALE 1:25

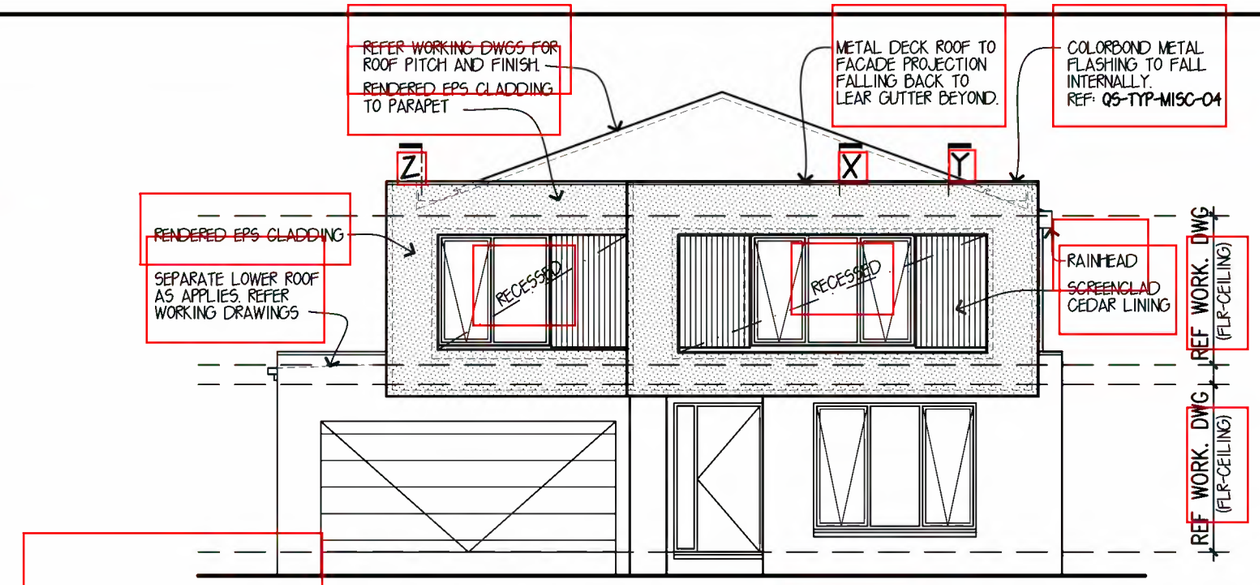

FRONT ELEVATION
INDICATIVE
SCALE 1:100

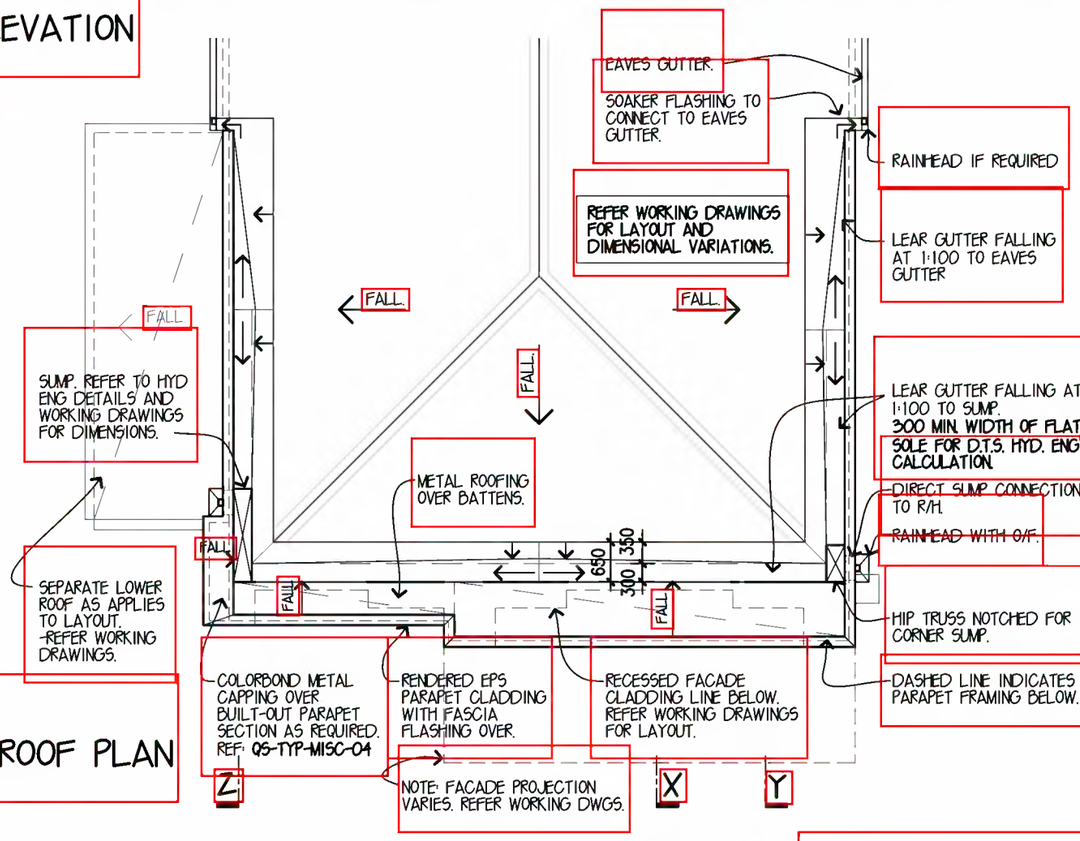

PARTIAL ROOF PLAN
INDICATIVE
SCALE 1:100

NOTES:
* THIS IS A STANDARD GENERIC DETAIL AND AS SUCH SHOULD BE TAKEN AS INDICATIVE ONLY. (WORKING DRAWINGS TAKE PRECEDENCE).
* INDICATIVE TRUSS POSITIONS, REFER TO MANUFACTURER'S LAYOUT.
* EXTERNAL CEILING FRAMING TO BE MAX. 450mm CTS.
* SOFFIT SHEET FRAMING AT MAX. 600mm CTS WITH APPROVED GALV. NAILS AT MAX. 300mm CTS ACROSS THE EAVE WIDTH.

MODE FACADE DETAIL

HIGHSET

SHEET 1 OF 6

Associated Detail

metricon
SUIT 20, LEVEL 2 RIVERWALK PLACE
238 ROBINA TOWN CENTRE DRIVE, ROBINA QLD
Telephone 07 5501 7200 Fax 07 5562 2194
NSW BSA No: 36654C QLD BSA No: 040992
ACN: 053189496

© COPYRIGHT The ideas and concepts contained within all drawings and documents is the sole property of Metricon Homes

METRICON HOMES OWNS COPYRIGHT IN THIS DRAWING. UNAUTHORISED USE, REPRODUCTION OR ADAPTION IS FORBIDDEN AND WILL BE PROSECUTED.

APPROVED: CRO, GHT	DATE: 06.02.2020
SCALE: AS NOTED	MST VER: NA
DRAWN: CCO	CHKED: JSM
ISSUED DATE: 06.02.2020	SHEET: Q-TYP-MODE-12

K:\ROBINA\OLD DRAWINGS\CONSTRUCTION DETAILS\FACADE DETAILS\Q-TYP-MODE-12.DWG

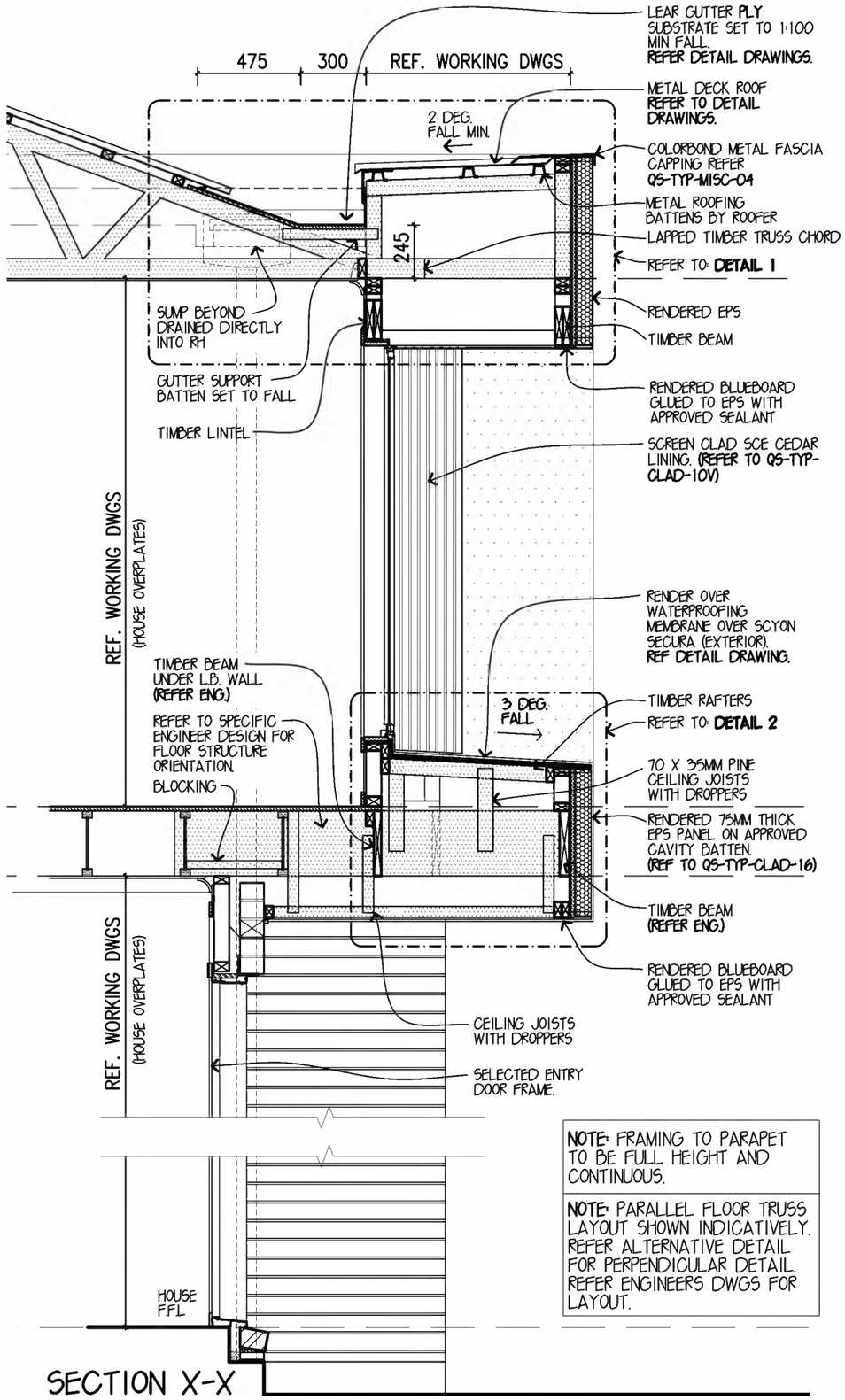

NOTE: FRAMING TO PARAPET TO BE FULL HEIGHT AND CONTINUOUS.

NOTE: PARALLEL FLOOR TRUSS LAYOUT SHOWN INDICATIVELY. REFER ALTERNATIVE DETAIL FOR PERPENDICULAR DETAIL. REFER ENGINEERS DWGS FOR LAYOUT.

SECTION X-X
THROUGH RECESSED GLAZING
SCALE 1:25

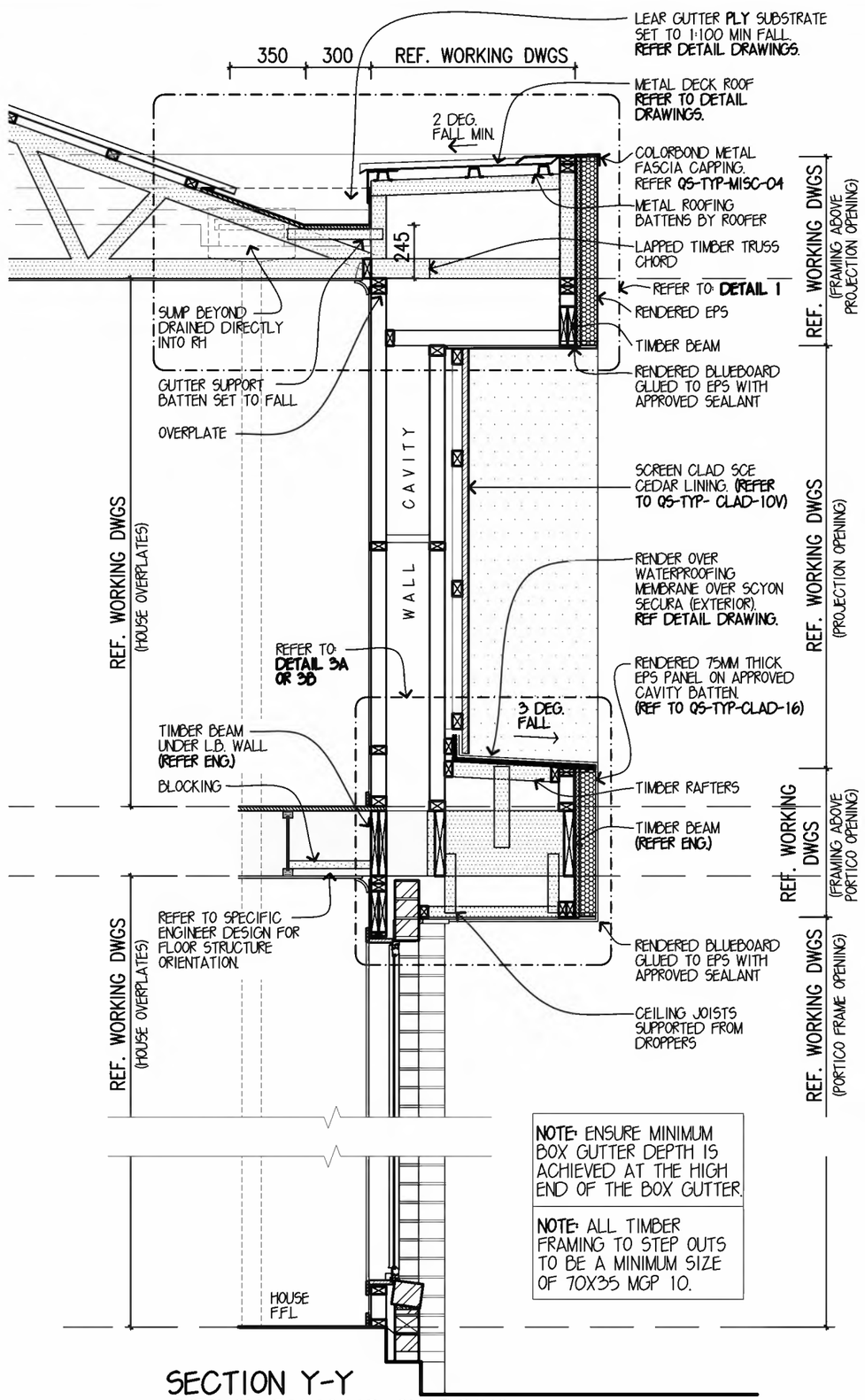

NOTE: ENSURE MINIMUM BOX GUTTER DEPTH IS ACHIEVED AT THE HIGH END OF THE BOX GUTTER.

NOTE: ALL TIMBER FRAMING TO STEP OUTS TO BE A MINIMUM SIZE OF 70X35 MGP 10.

SECTION Y-Y
THROUGH RECESSED CLADDING
SCALE 1:25

NOTES:
* THIS IS A STANDARD GENERIC DETAIL AND AS SUCH SHOULD BE TAKEN AS INDICATIVE ONLY. (WORKING DRAWINGS TAKE PRECEDENCE).
* INDICATIVE TRUSS POSITIONS, REFER TO MANUFACTURER'S LAYOUT.
* EXTERNAL CEILING FRAMING TO BE MAX. 450mm CTS.
* SOFFIT SHEET FRAMING AT MAX. 600mm CTS WITH APPROVED GALV. NAILS AT MAX. 300mm CTS ACROSS THE EAVE WIDTH.

MODE FACADE DETAIL

HIGHSET

SHEET 2 OF 6

Associated Detail

metricon
SUIT 20, LEVEL 2 RIVERWALK PLACE
238 ROBINA TOWN CENTRE DRIVE, ROBINA QLD
Telephone 07 5501 7200 Fax 07 5562 2194
NSW BSA No: 36654C QLD BSA No: 040992
ACN: 053189496

© COPYRIGHT The ideas and concepts contained within all drawings and documents is the sole property of Metricon Homes

METRICON HOMES OWNS COPYRIGHT IN THIS DRAWING. UNAUTHORISED USE, REPRODUCTION OR ADAPTION IS FORBIDDEN AND WILL BE PROSECUTED.

APPROVED: CRO, GHT	DATE: 06.02.2020
SCALE: 1:25	MST VER: NA
DRAWN: CCO	CHKED: JSM
ISSUED DATE: 06.02.2020	SHEET: Q-TYP-MODE-12

K:\ROBINA\QLD DRAWINGS\CONSTRUCTION DETAILS\FACADE DETAILS\Q-TYP-MODE-12.DWG

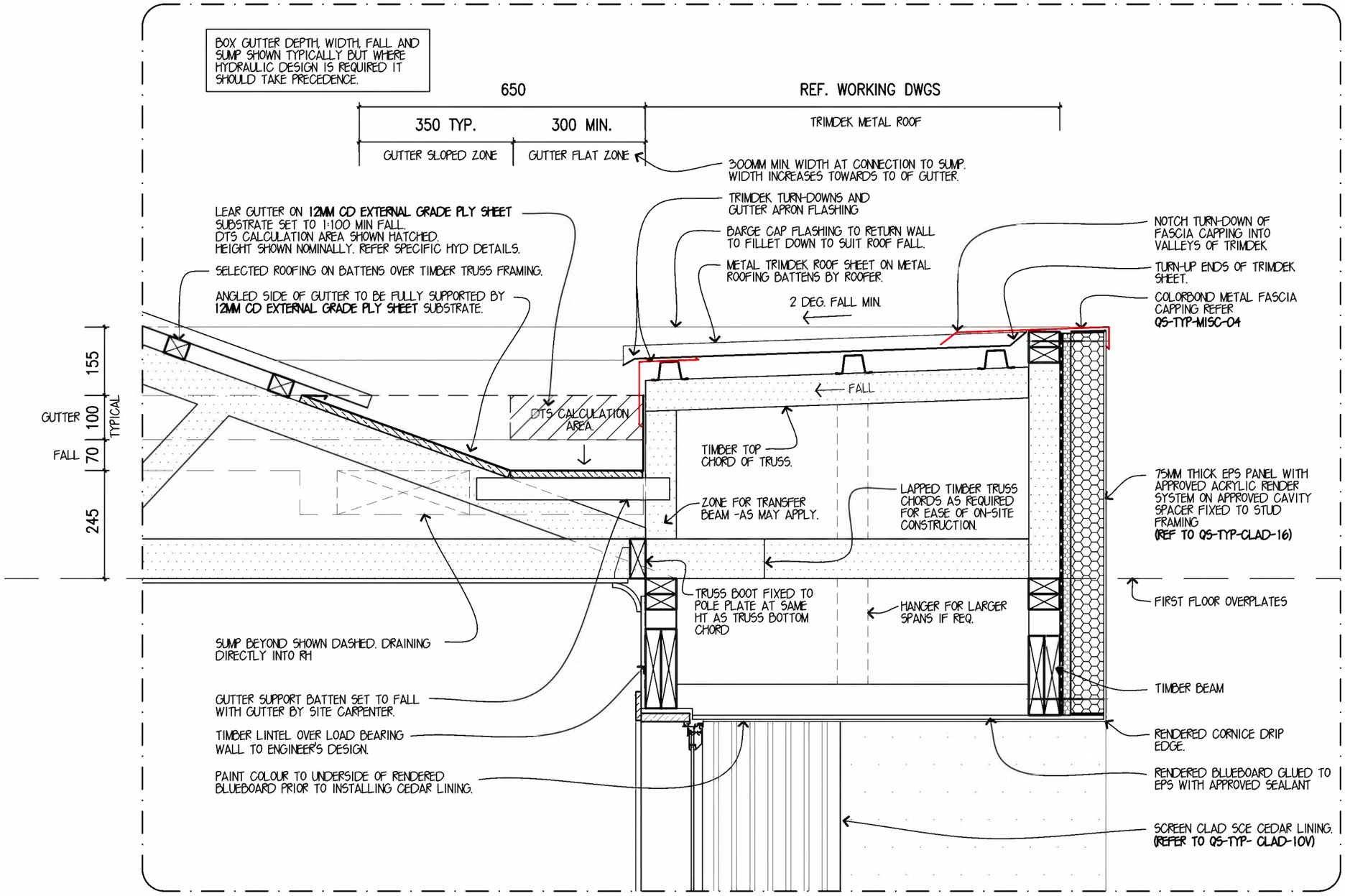

DETAIL 1
PARAPET PROJECTION DETAIL

SCALE 1:10

HYDRAULIC CAPACITY CALCULATIONS MAY BE REQUIRED. WHERE APPLICABLE, THEY ARE TO TAKE PRECEDENCE.

NOTE:
THIS IS A STANDARD GENERIC DETAIL AND AS SUCH SHOULD BE TAKEN AS INDICATIVE ONLY.
ORDER OF PRECEDENCE: 1. HYDRAULIC DESIGN
2. WORKING DRAWINGS
3. GENERIC DETAIL

NOTES:
- BOX GUTTER FALL AND VOLUME MUST BE TAKEN INTO CONSIDERATION WITH THE MIN. DEPTH OF BOX GUTTER COMMENCING AT THE HIGHEST POINT OF THE BOX GUTTER.
- BOX GUTTER MUST HAVE PLY BASE.
- 1:100 MIN. FALL TO BOX GUTTER.
- ALL SUMPS MUST INCLUDE REQUIRED OVERFLOW POP

Associated Detail

metricon
SUIT 20, LEVEL 2 RIVERWALK PLACE
238 ROBINA TOWN CENTRE DRIVE, ROBINA QLD
Telephone 07 5501 7200 Fax 07 5562 2194
NSW BSA No: 36654C QLD BSA No: 040992
ACN: 053189496

© COPYRIGHT The ideas and concepts contained within all drawings and documents is the sole property of Metricon Homes

MODE FACADE DETAIL

HIGHSET

SHEET 3 OF 6

NOTES:
* THIS IS A STANDARD GENERIC DETAIL AND AS SUCH SHOULD BE TAKEN AS INDICATIVE ONLY. (WORKING DRAWINGS TAKE PRECEDENCE).
* INDICATIVE TRUSS POSITIONS, REFER TO MANUFACTURER'S LAYOUT.
* EXTERNAL CEILING FRAMING TO BE MAX. 450mm CTS.
* SOFFIT SHEET FRAMING AT MAX. 600mm CTS WITH APPROVED GALV. NAILS AT MAX. 300mm CTS ACROSS THE EAVE WIDTH.

METRICON HOMES OWNS COPYRIGHT IN THIS DRAWING. UNAUTHORISED USE, REPRODUCTION OR ADAPTION IS FORBIDDEN AND WILL BE PROSECUTED.

APPROVED: CRO, GHT	DATE: 06.02.2020
SCALE: 1:10	MST VER: NA
DRAWN: CCO	CHKED: JSM
ISSUED DATE: 06.02.2020	SHEET: Q-TYP-MODE-12

K:\ROBINA\QLD DRAWINGS\CONSTRUCTION DETAILS\FACADE DETAILS\Q-TYP-MODE-12.DWG

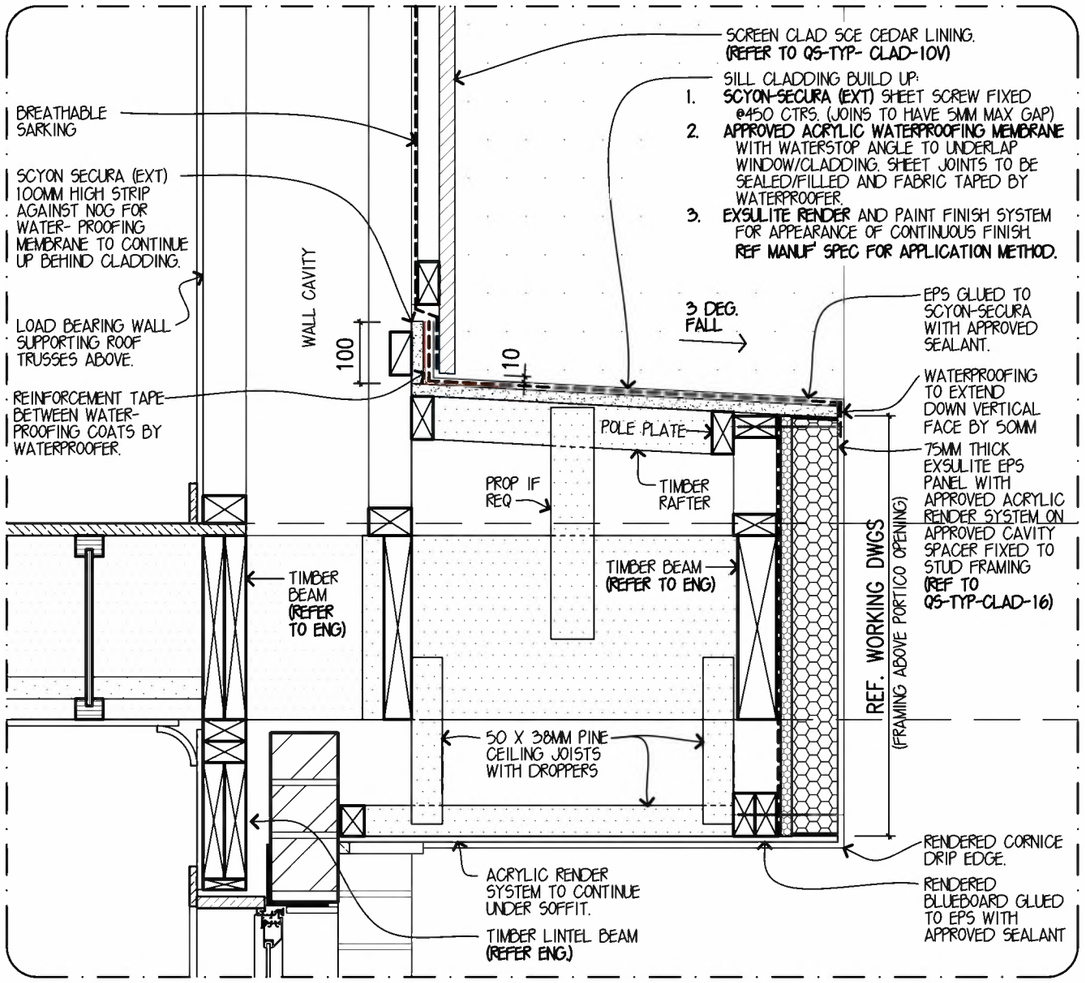

DETAIL 3A
SILL PROJECTION DETAIL -PARALLEL FRAMING

SCALE 1:10

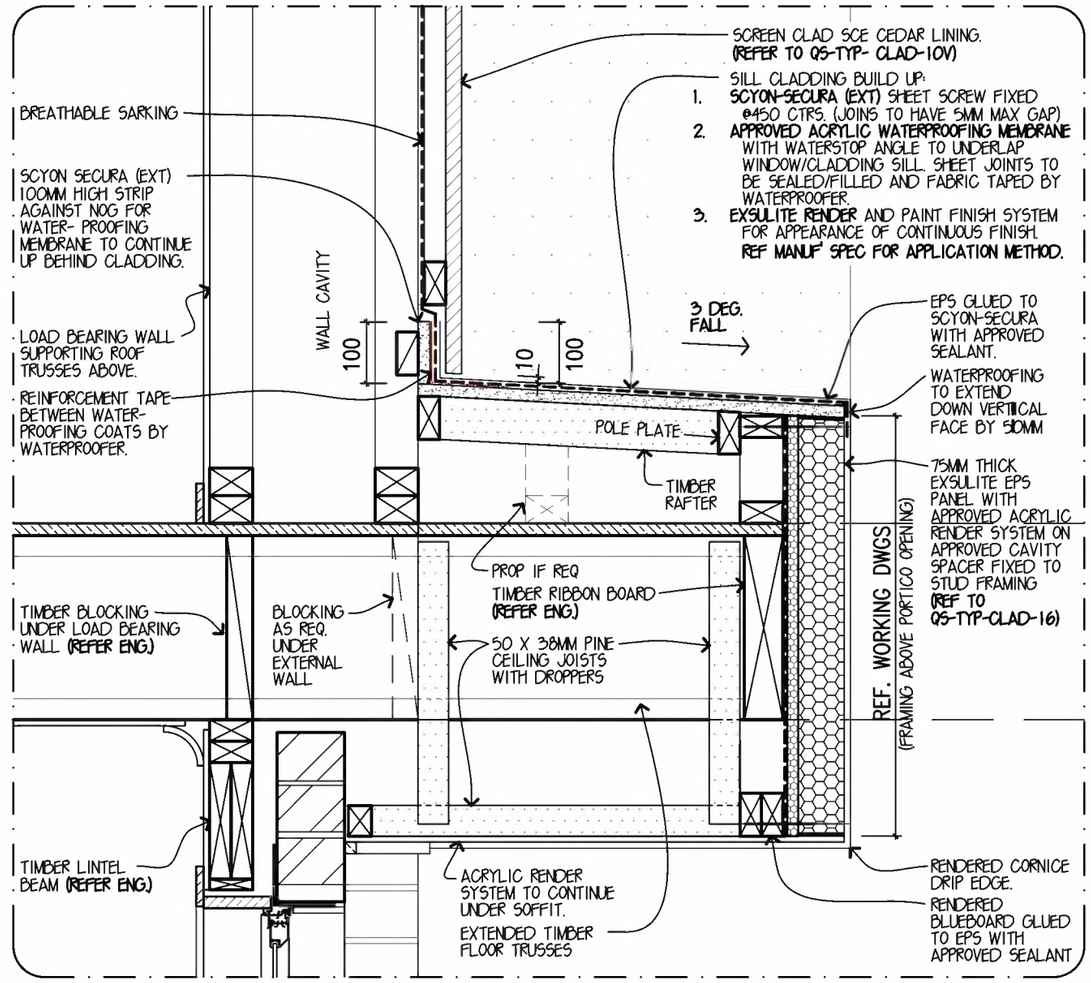

DETAIL 3B
SILL PROJECTION DETAIL -PURPENDICULAR FRAMING

SCALE 1:10

ENSURE THAT SELECTED FLASHING TAPE, WATERPROOFING MEMBRANE AND ACRYLIC RENDER COATING PRODUCTS ARE COMPATIBLE AND APPLIED TO MANUF' SPECIFICATIONS

NOTE: REFER STRUCTURAL ENGINEER'S DWGS AND TRUSS MANUFACTURE'S DRAWINGS FOR SPECIFIC FRAMING DESIGN LAYOUT.

NOTES:
* THIS IS A STANDARD GENERIC DETAIL AND AS SUCH SHOULD BE TAKEN AS INDICATIVE ONLY. (WORKING DRAWINGS TAKE PRECEDENCE).
* INDICATIVE TRUSS POSITIONS, REFER TO MANUFACTURER'S LAYOUT.
* EXTERNAL CEILING FRAMING TO BE MAX. 450mm CTS.
* SOFFIT SHEET FRAMING AT MAX. 600mm CTS WITH APPROVED GALV. NAILS AT MAX. 300mm CTS ACROSS THE EAVE WIDTH.

MODE FACADE DETAIL

HIGHSET

SHEET 4 OF 6

Associated Detail

metricon
SUIT 20, LEVEL 2 RIVERWALK PLACE
238 ROBINA TOWN CENTRE DRIVE, ROBINA QLD
Telephone 07 5501 7200 Fax 07 5562 2194
NSW BSA No: 36654C QLD BSA No: 040992
ACN: 053189496
© COPYRIGHT The ideas and concepts contained within all drawings and documents is the sole property of Metricon Homes

METRICON HOMES OWNS COPYRIGHT IN THIS DRAWING. UNAUTHORISED USE, REPRODUCTION OR ADAPTION IS FORBIDDEN AND WILL BE PROSECUTED.

APPROVED: CRO, GHT	DATE: 06.02.2020
SCALE: 1:10	MST VER: NA
DRAWN: CCO	CHKED: JSM
ISSUED DATE: 06.02.2020	SHEET: Q-TYP-MODE-12

K:\ROBINA\QLD DRAWINGS\CONSTRUCTION DETAILS\FACADE DETAILS\Q-TYP-MODE-12.DWG

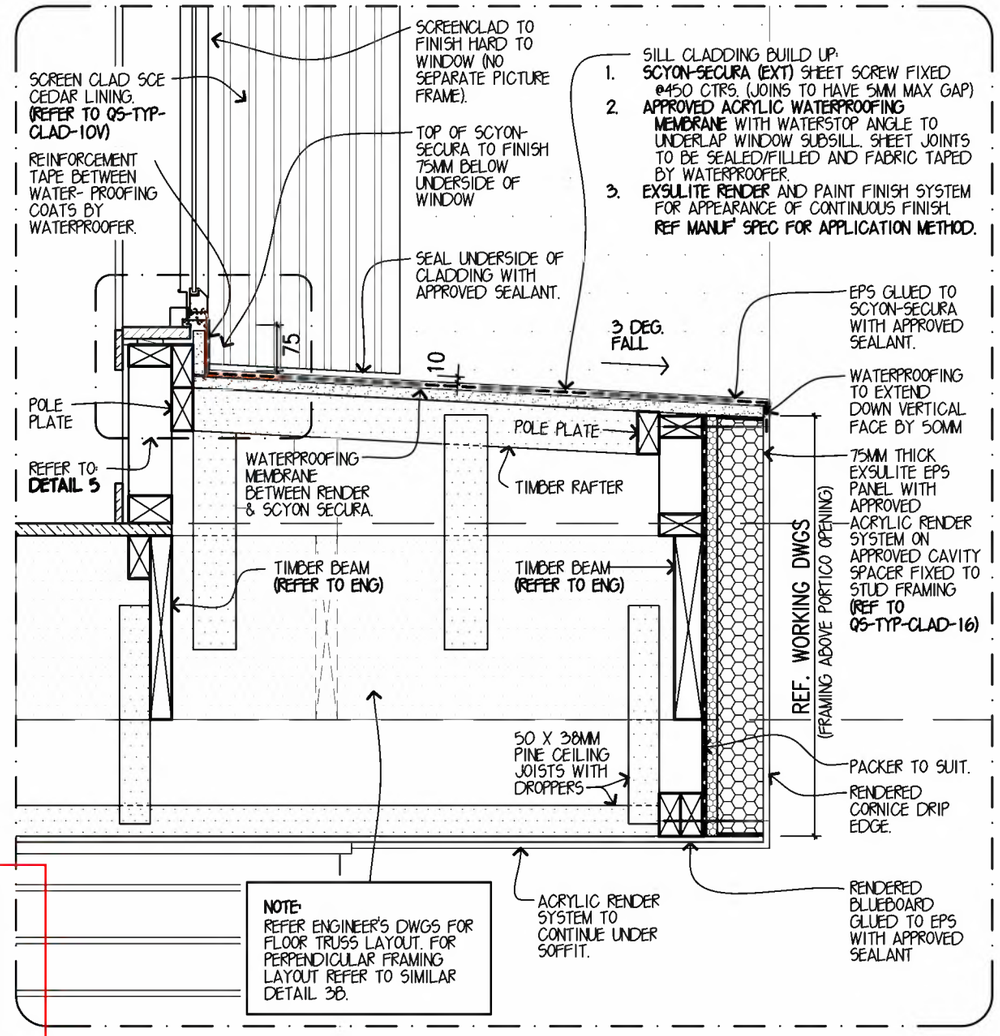

DETAIL 2
WINDOW SILL PROJECTION FRAMING -PARALLEL FRAMING

SCALE 1:10

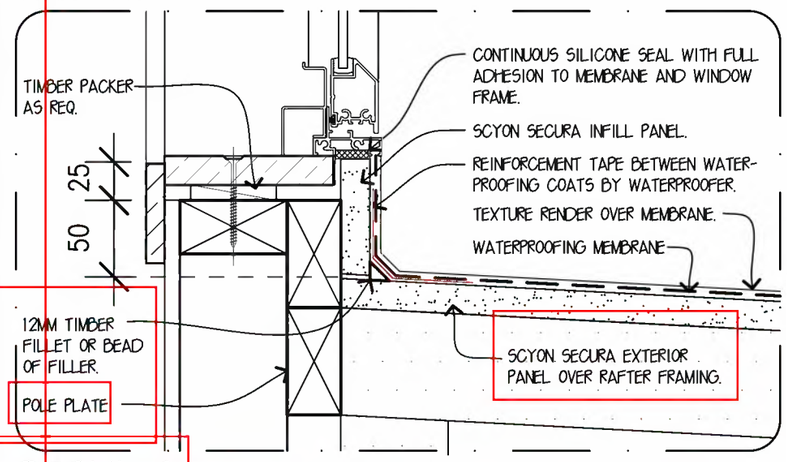

DETAIL 5
WINDOW SILL DETAIL

SCALE 1:4

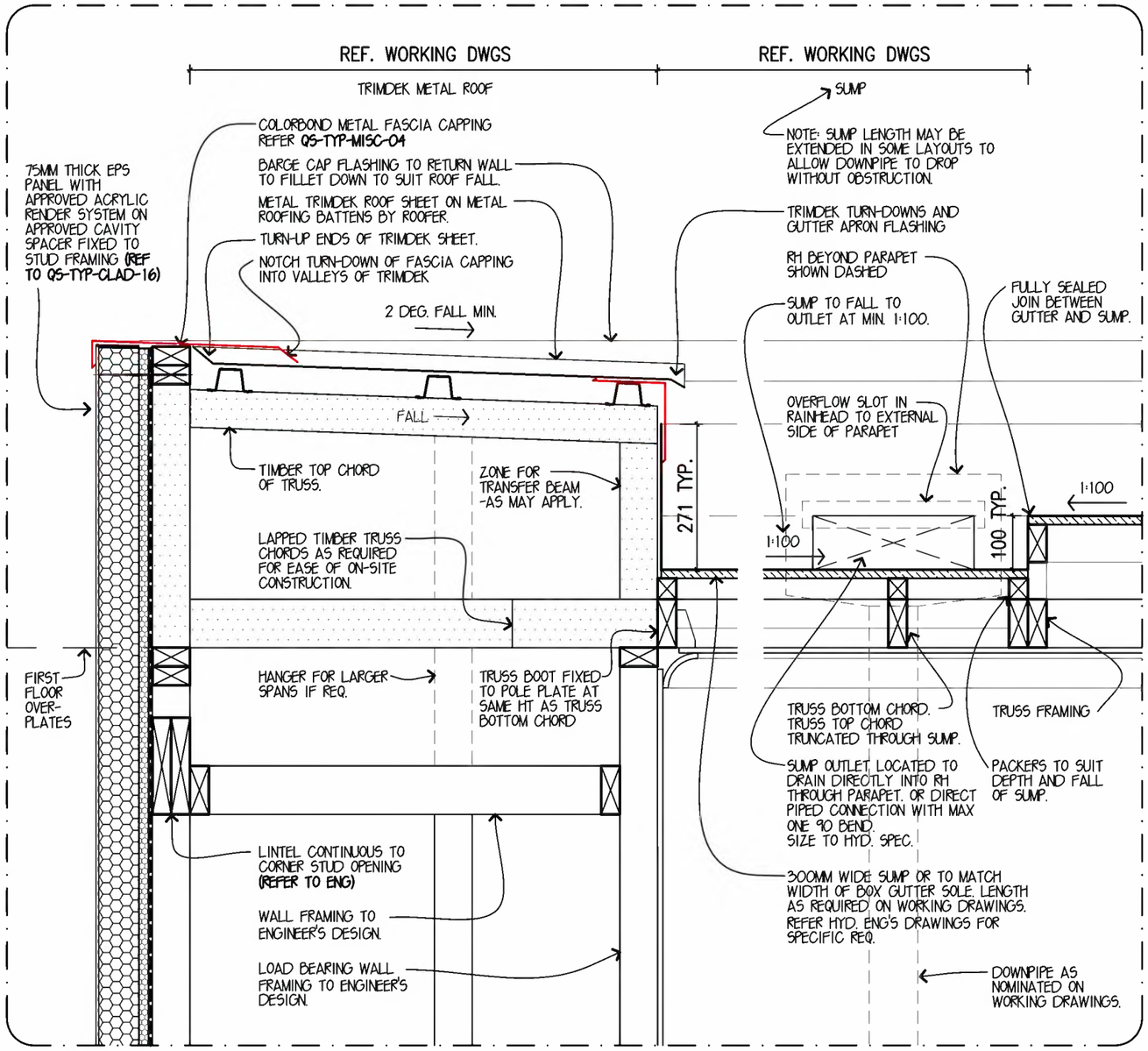

DETAIL 4
PARAPET PROJECTION DETAIL

SCALE 1:10

NOTES:
- BOX GUTTER FALL AND VOLUME MUST BE TAKEN INTO CONSIDERATION WITH THE MIN. DEPTH OF BOX GUTTER COMMENCING AT THE HIGHEST POINT OF THE BOX GUTTER.
- BOX GUTTER MUST HAVE PLY BASE.
- 1:100 MIN. FALL TO BOX GUTTER.
- ALL SUMPS MUST INCLUDE REQUIRED OVERFLOW POP

NOTE: REFER HYDRAULIC ENGINEER'S DWGS FOR SPECIFIC ROOF DRAINAGE REQUIREMENTS.

NOTE: REFER STRUCTURAL ENGINEER'S DWGS AND TRUSS MANUFACTURE'S DRAWINGS FOR SPECIFIC FRAMING DESIGN LAYOUT.

ENSURE THAT SELECTED FLASHING TAPE, WATERPROOFING MEMBRANE AND ACRYLIC RENDER COATING PRODUCTS ARE COMPATIBLE AND APPLIED TO MANUF' SPECIFICATIONS

NOTES:
* THIS IS A STANDARD GENERIC DETAIL AND AS SUCH SHOULD BE TAKEN AS INDICATIVE ONLY. (WORKING DRAWINGS TAKE PRECEDENCE).
* INDICATIVE TRUSS POSITIONS, REFER TO MANUFACTURER'S LAYOUT.
* EXTERNAL CEILING FRAMING TO BE MAX. 450mm CTS.
* SOFFIT SHEET FRAMING AT MAX. 600mm CTS WITH APPROVED GALV. NAILS AT MAX. 300mm CTS ACROSS THE EAVE WIDTH.

MODE FACADE DETAIL

HIGHSET

SHEET 5 OF 6

Associated Detail

metricon

SUIT 20, LEVEL 2 RIVERWALK PLACE
238 ROBINA TOWN CENTRE DRIVE, ROBINA QLD
Telephone 07 5501 7200 Fax 07 5562 2194
NSW BSA No: 36654C QLD BSA No: 040992
ACN: 053189496

© COPYRIGHT The ideas and concepts contained within all drawings and documents is the sole property of Metricon Homes

METRICON HOMES OWNS COPYRIGHT IN THIS DRAWING. UNAUTHORISED USE, REPRODUCTION OR ADAPTION IS FORBIDDEN AND WILL BE PROSECUTED.

APPROVED: CRO, GHT		DATE: 06.02.2020	
SCALE: AS INDICATED		MST VER: NA	
DRAWN: CCO		CHKED: JSM	
ISSUED DATE: 06.02.2020		SHEET: Q-TYP-MODE-12	

K:\ROBINA\QLD DRAWINGS\CONSTRUCTION DETAILS\FACADE DETAILS\TYP-MODE-12.DWG

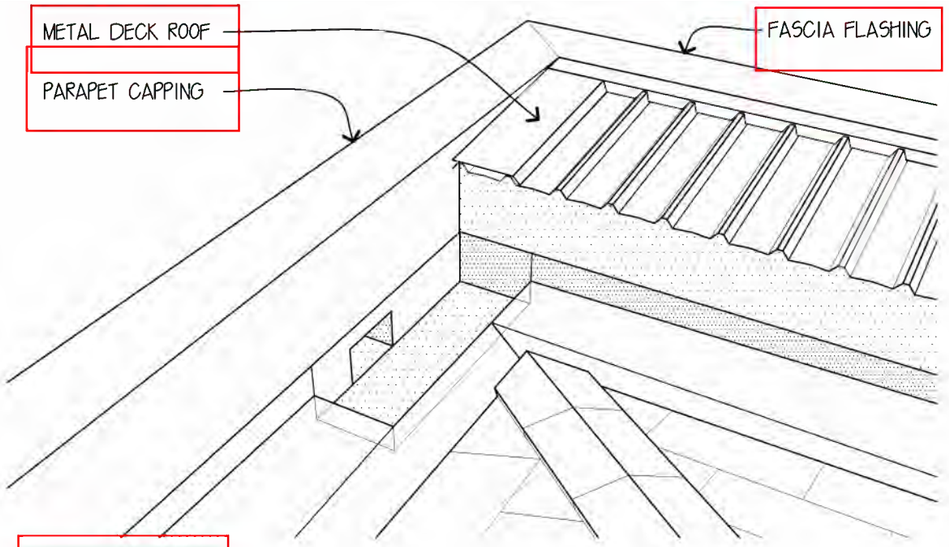

DETAIL 1A
ROOF 3D VIEW

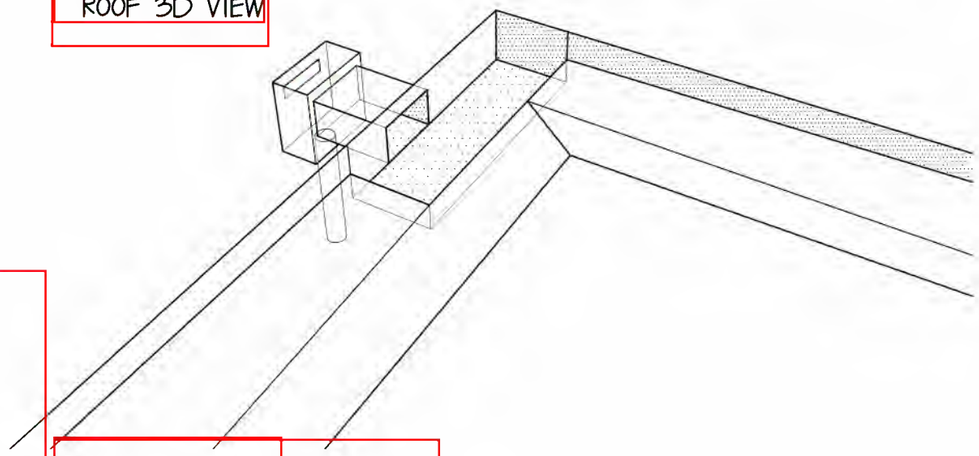

DETAIL 1B
GUTTER ASSEMBLY 3D VIEW

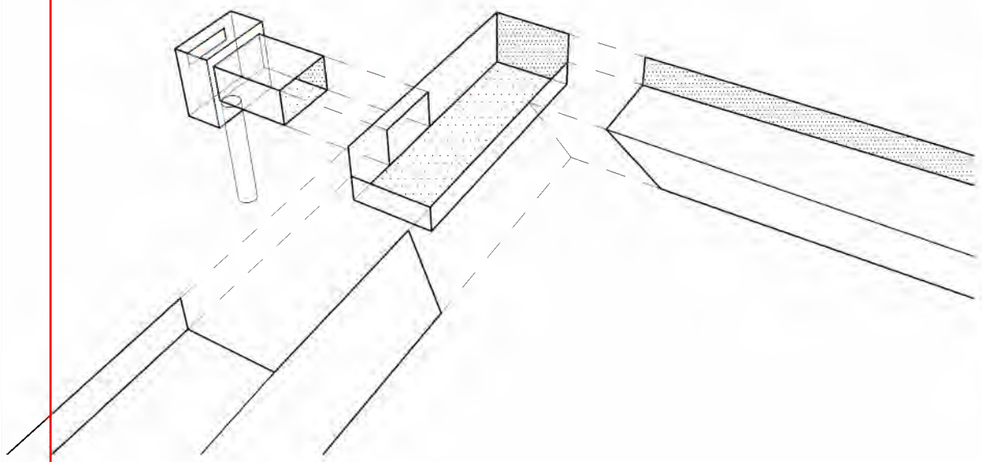

DETAIL 1C
GUTTER EXPLODED 3D VIEW

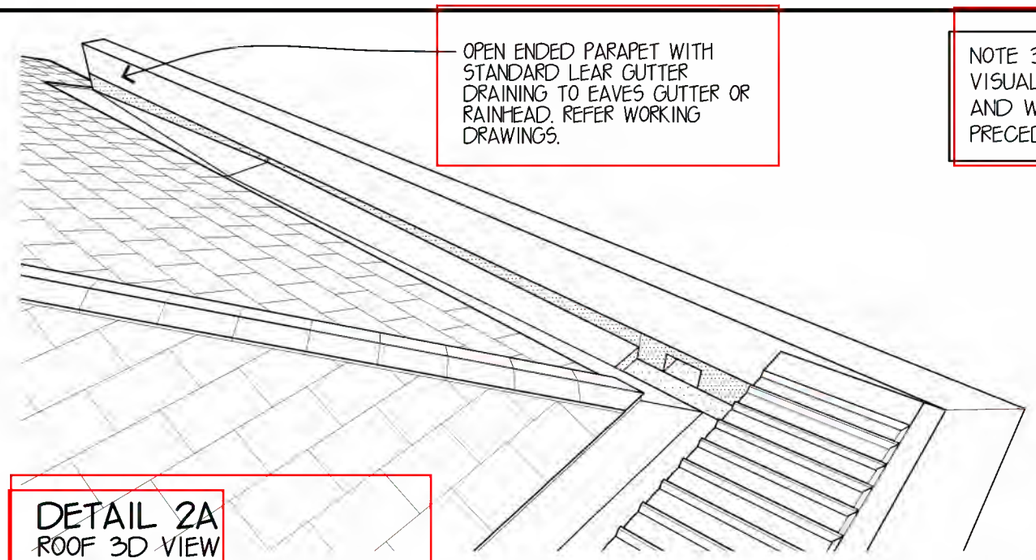

DETAIL 2A
ROOF 3D VIEW

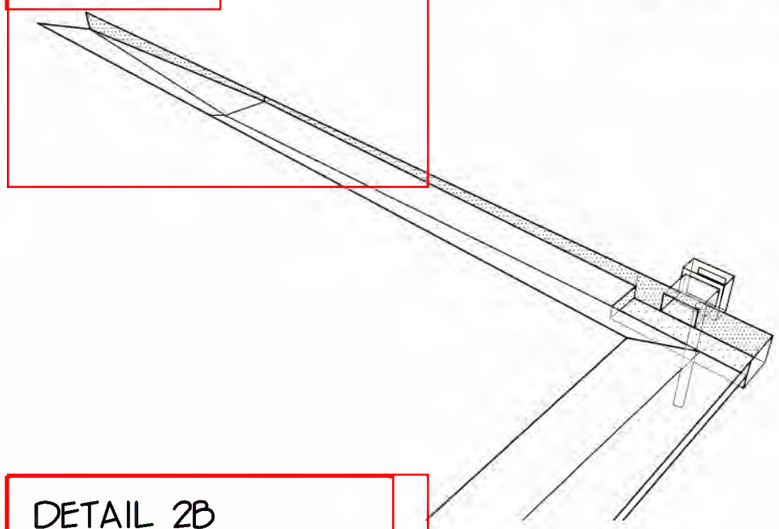

DETAIL 2B
GUTTER ASSEMBLY 3D VIEW

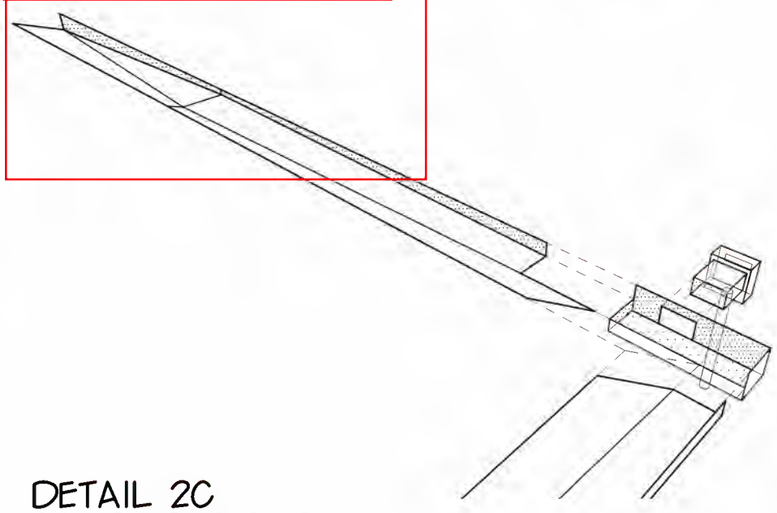

DETAIL 2C
GUTTER EXPLODED 3D VIEW

NOTE 3D VIEWS ARE FOR VISUALISATION ONLY. DETAIL AND WORKING DRAWINGS TAKE PRECEDENCE.

Associated Detail

metricon

SUIT 20, LEVEL 2 RIVERWALK PLACE
238 ROBINA TOWN CENTRE DRIVE, ROBINA QLD
Telephone 07 5501 7200 Fax 07 5562 2194
NSW BSA No: 36654C QLD BSA No: 040992
ACN: 053189496

© COPYRIGHT The ideas and concepts contained within all drawings and documents is the sole property of Metricon Homes

MODE FACADE DETAIL

HIGHSET

SHEET 6 OF 6

NOTES:

* THIS IS A STANDARD GENERIC DETAIL AND AS SUCH SHOULD BE TAKEN AS INDICATIVE ONLY. (WORKING DRAWINGS TAKE PRECEDENCE).
* INDICATIVE TRUSS POSITIONS, REFER TO MANUFACTURER'S LAYOUT.
* EXTERNAL CEILING FRAMING TO BE MAX. 450mm CTS.
* SOFFIT SHEET FRAMING AT MAX. 600mm CTS WITH APPROVED GALV. NAILS AT MAX. 300mm CTS ACROSS THE EAVE WIDTH.

METRICON HOMES OWNS COPYRIGHT IN THIS DRAWING. UNAUTHORISED USE, REPRODUCTION OR ADAPTION IS FORBIDDEN AND WILL BE PROSECUTED.

APPROVED: CRO, GHT	DATE: 06.02.2020
SCALE: NTS	MST VER: NA
DRAWN: CCO	CHKED: JSM
ISSUED DATE: 06.02.2020	SHEET: Q-TYP-MODE-12

K:\ROBINA\QLD DRAWINGS\CONSTRUCTION DETAILS\FACADE DETAILS\Q-TYP-MODE-12.DWG

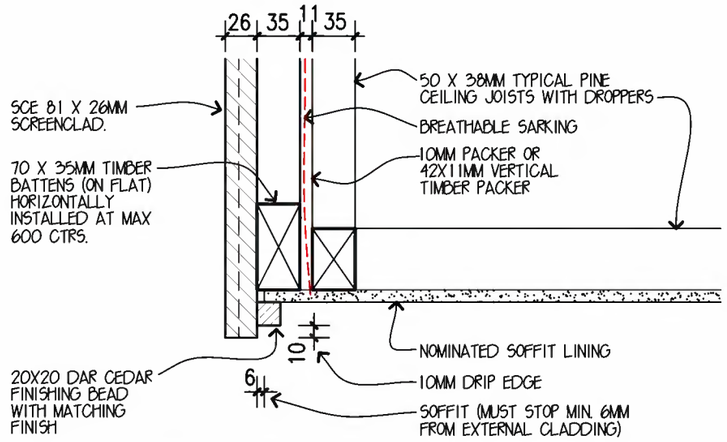

SOFFIT/CEILING JUNCTION
SECTION DETAIL

SCALE 1:5

NOTE:
ALL SARKING TO BE INSTALLED PRIOR TO FITTING WINDOWS AND BE RETURNED AND SECURED TO INNER FRAME

NOTE:
NON-CORROSIVE FIXINGS TO BE USED WITH RESISTANCE LEVEL REQUIRED BY THE LOCATION / EXPOSURE.

NOTE:
CUTTING-IN OF SURROUNDING PAINTWORK TO BE DONE PRIOR TO THE INSTALLATION OF CLADDING.

NOTE:
ALL VERTICALLY LAID SCREEN CLADDING MUST BE GLUED TO BATTEN WITH CONSTRUCTION ADHESIVE AND CONCEALED BY SECRET NAILING THROUGH TONGUE OF BOARD TO NCC/AS AND MANUFACTURERS SPEC.

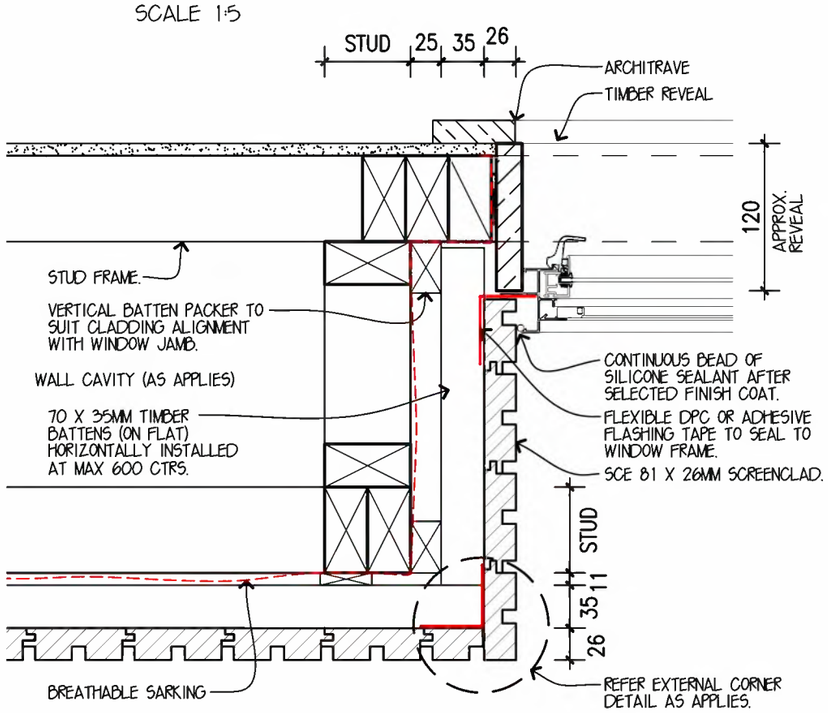

RETURN WALL WINDOW JAMB
PLAN DETAIL

SCALE 1:5

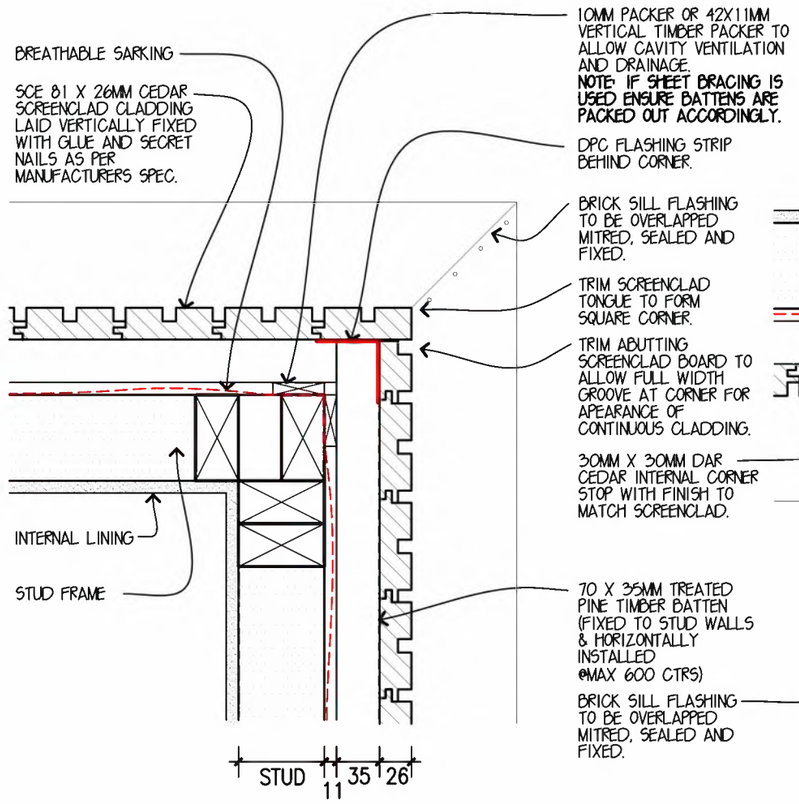

EXTERNAL CORNER
PLAN DETAIL

SCALE 1:5

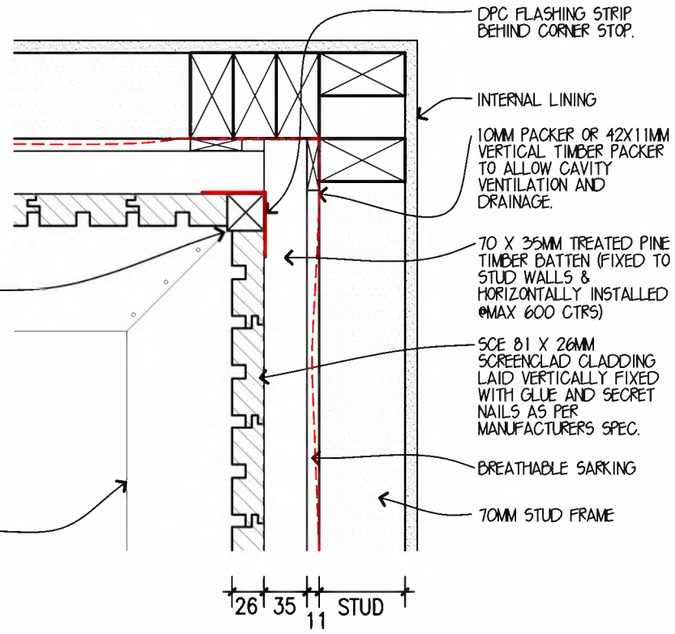

INTERNAL CORNER
PLAN DETAIL

SCALE 1:5

VARIATIONS:			
No:	Date:	No:	Date:
1. ORGINAL ISSUE	30.01.20	.	
.		.	
.		.	
.		.	
.		.	

NOTES:
- THIS IS A STANDARD GENERIC DETAIL AND AS SUCH SHOULD BE TAKEN AS INDICATIVE ONLY. (WORKING DRAWINGS TAKE PRECEDENCE).
- ALL FIXINGS ARE TO BE CONCEALED AND TO MANUFACTURERS, NCC & AS SPECIFICATIONS.
- USE NON CORROSIVE FIXINGS WITH RESISTANCE RELEVANT TO EXPOSURE OF LOCATION
- WHERE EXTERNAL SHEET BRACING IS LOCATED PACKING IS REQUIRED TO ACHIEVE FLUSH BATTENS.
- BAL 12.5 UP TO & INCL. BAL 29 MUST HAVE BRICK BASE MIN 400MM HIGH ABOVE FINISHED LEVEL
- CLADDING TYPE NOT SUITABLE FOR BAL 40 & BAL FZ

SCREENCLAD CEDAR CLADDING DETAIL (VERTICAL APPLICATION)

SHEET 1 OF 3

Standard Detail

metricon

SUITE 20, LEVEL 2 RIVERWALK PLACE
238 ROBINA TOWN CENTRE DRIVE, ROBINA, QLD
Telephone: 07 5501 7200 Fax: 07 5562 2194
NSW BSA No: 36654C QLD BSA No: 040992
ACN: 053189496

© COPYRIGHT The ideas and concepts contained within all drawings and documents is the sole property of Metricon Homes

OWNER: METRICON HOMES
238 ROBINA TOWN CENTRE DRIVE
ROBINA

APPROVED: CRO, GHT	DATE: 30.01.20
SCALE: AS NOTED	MST VER: 30.01.20
DRAWN: CCO	CHKED: JSM
ISSUED DATE: 30.01.20	SHEET: QS-TYP-CLAD-10V

K:\ROBINA\QLD DRAWINGS\CONSTRUCTION DETAILS\002 - CONSTRUCTION DETAILS - DETAILS\CLADDING DETAILS\QS-TYP-CLAD-10V_SCREENCLAD.DWG

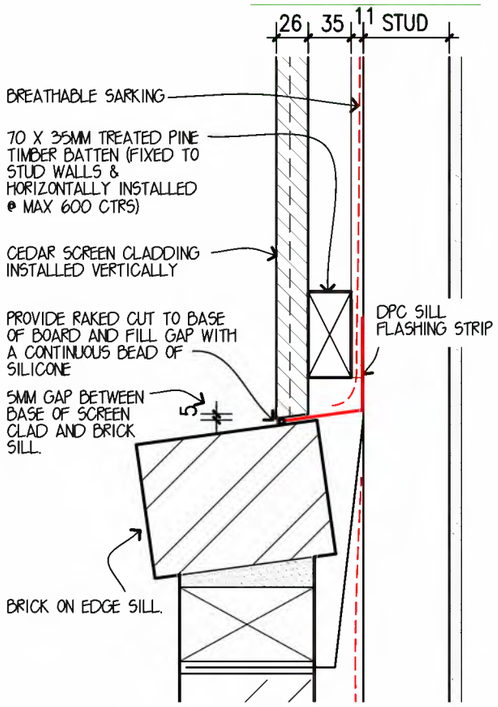

BRICK SILL JUNCTION
SECTION DETAIL

SCALE 1:5

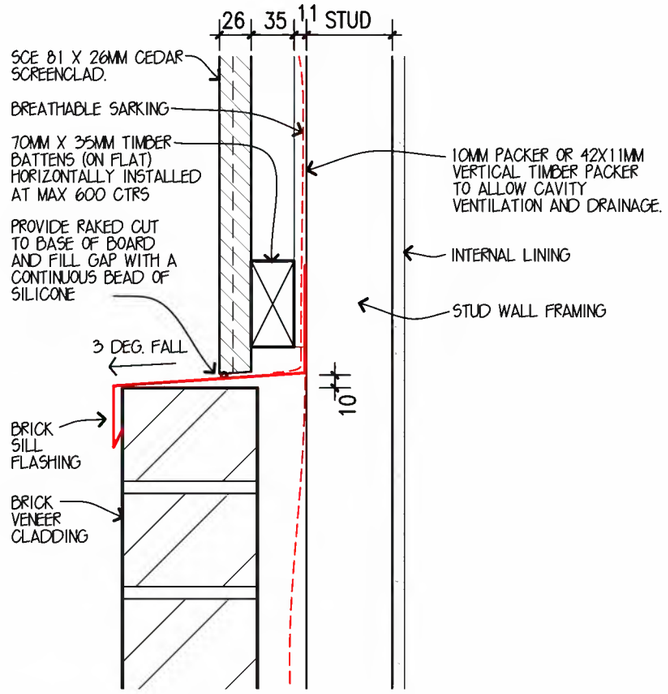

BRICK PARAPET JUNCTION
SECTION DETAIL

SCALE 1:5

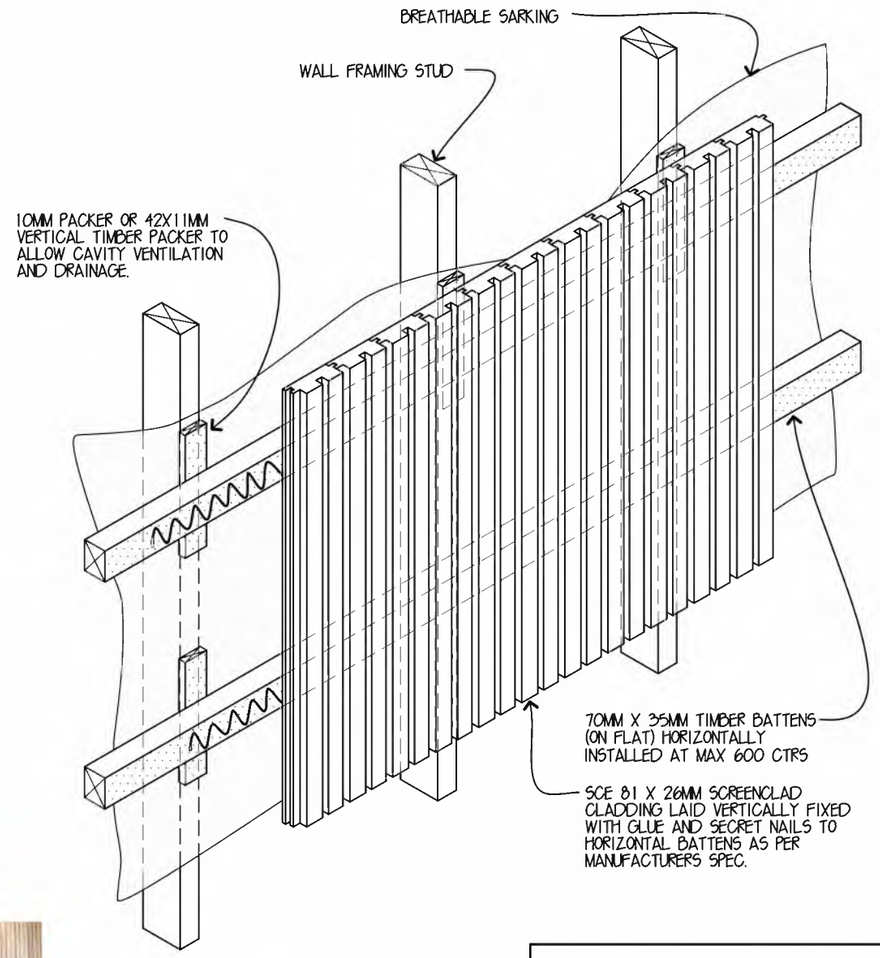

AXONOMETRIC VIEW
VERTICAL CEDAR SCREENCLAD

SCALE 1:10

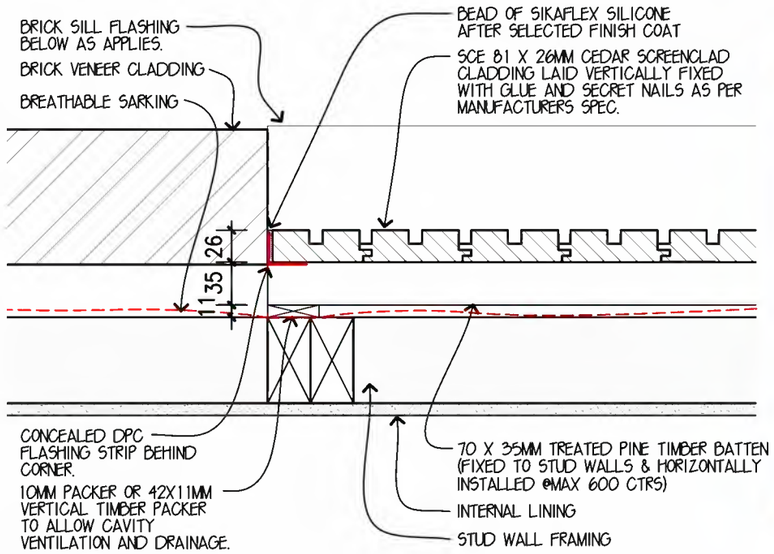

BRICK WALL JUNCTION
PLAN VIEW

SCALE 1:5

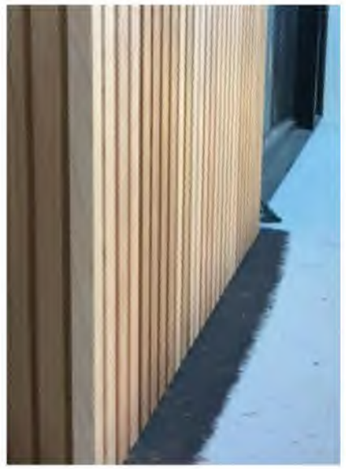

NOTE:
CUTTING-IN OF SURROUNDING PAINTWORK TO BE DONE PRIOR TO THE INSTALLATION OF CLADDING.

NOTE:
NON-CORROSIVE FIXINGS TO BE USED WITH RESISTANCE LEVEL REQUIRED BY THE LOCATION / EXPOSURE.

NOTE:
ALL VERTICALLY LAID SCREEN CLADDING MUST BE GLUED TO BATTEN WITH CONSTRUCTION ADHESIVE AND CONCEALED BY SECRET NAILING THROUGH TONGUE OF BOARD TO NCC/AS AND MANUFACTURERS SPEC.

VARIATIONS:	
1. ORIGINAL ISSUE 30.01.20	

NOTES:
- THIS IS A STANDARD GENERIC DETAIL AND AS SUCH SHOULD BE TAKEN AS INDICATIVE ONLY. (WORKING DRAWINGS TAKE PRECEDENCE).
- ALL FIXINGS ARE TO BE CONCEALED AND TO MANUFACTURERS, NCC & AS SPECIFICATIONS.
- USE NON CORROSIVE FIXINGS WITH RESISTANCE RELEVANT TO EXPOSURE OF LOCATION
- WHERE EXTERNAL SHEET BRACING IS LOCATED PACKING IS REQUIRED TO ACHIEVE FLUSH BATTENS.
- BAL 12.5 UP TO & INCL. BAL 29 MUST HAVE BRICK BASE MIN 400MM HIGH ABOVE FINISHED LEVEL
- CLADDING TYPE NOT SUITABLE FOR BAL 40 & BAL FZ

SCREENCLAD CEDAR CLADDING DETAIL (VERTICAL APPLICATION)

SHEET 2 OF 3

Standard Detail

metricon

SUITE 20, LEVEL 2 RIVERWALK PLACE
238 ROBINA TOWN CENTRE DRIVE, ROBINA, QLD
Telephone: 07 5501 7200 Fax: 07 5562 2194
NSW BSA No: 36654C QLD BSA No: 040992
ACN: 053189496

© COPYRIGHT The ideas and concepts contained within all drawings and documents is the sole property of Metricon Homes

OWNER: METRICON HOMES
238 ROBINA TOWN CENTRE DRIVE
ROBINA

APPROVED: CRO, GHT	DATE: 30.01.20
SCALE: AS NOTED	MST VER: 30.01.20
DRAWN: CCO	CHKED: JSM
ISSUED DATE: 30.01.20	SHEET: 05-TYP-CLAD-10V

K:\ROBINA\QLD DRAWINGS\CONSTRUCTION DETAILS\1002 - CONSTRUCTION DETAILS - DETAILS\CLADDING DETAILS\05-TYP-CLAD-10V_SCREENCLAD.DWG

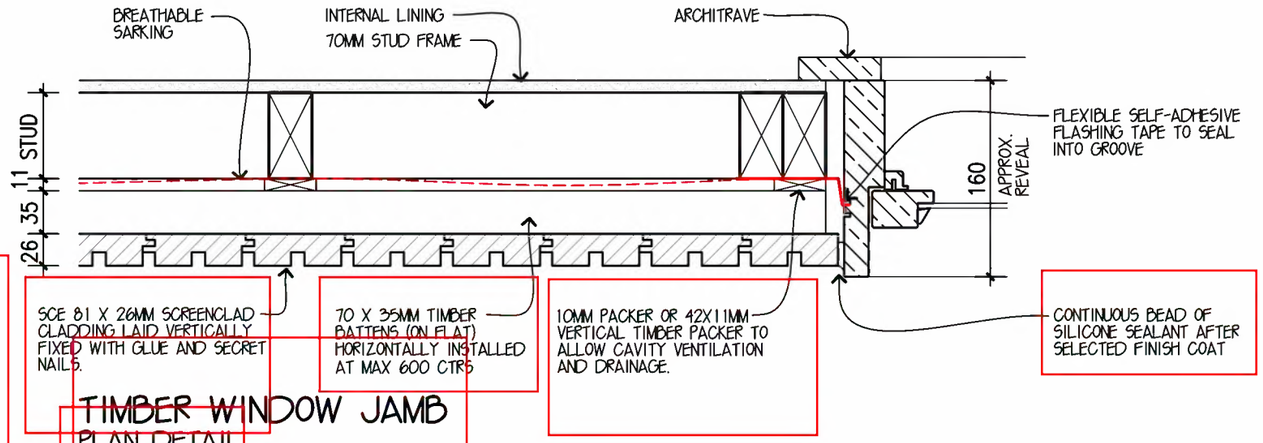

TIMBER WINDOW JAMB
PLAN DETAIL
SCALE 1:5

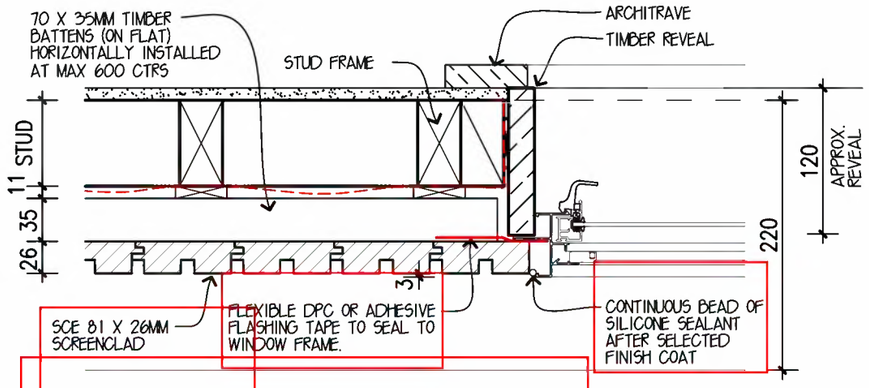

BRADNAM/TREND WINDOW JAMB
PLAN DETAIL
SCALE 1:5

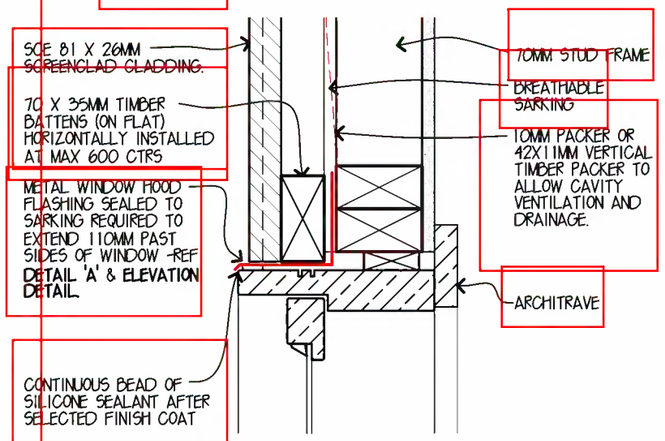

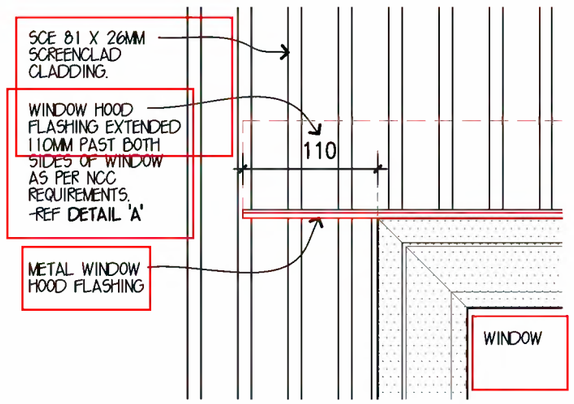

WINDOW HOOD FLASHING
ELEVATION DETAIL
SCALE 1:5

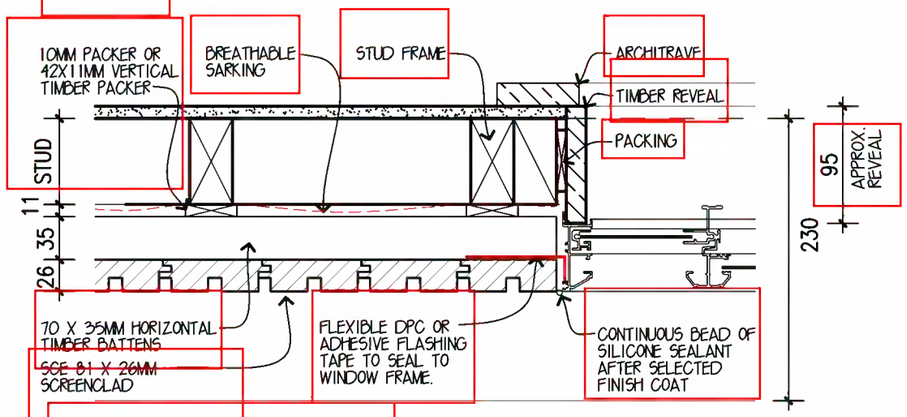

A&L WINDOW JAMB
PLAN DETAIL
SCALE 1:5

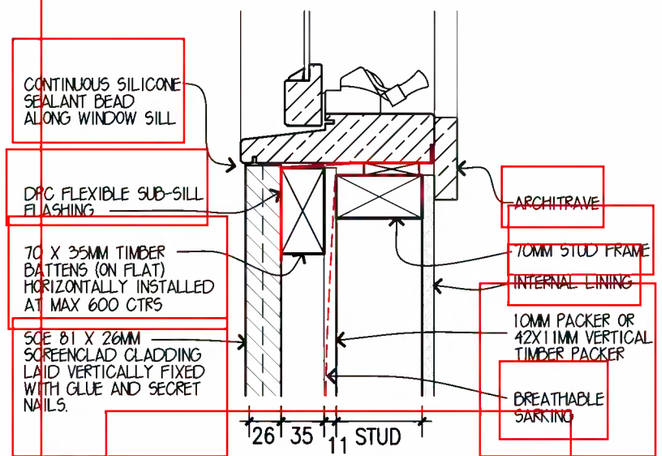

TIMBER WINDOW HEAD/SILL
SECTION DETAIL
SCALE 1:5

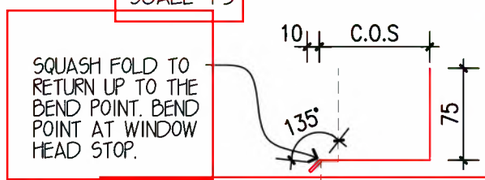

NOTE: FLASHING TO BE SUPPLIED AS GAL AND PAINTED TO MATCH CLADDING PRIOR TO INSTALLATION.

DETAIL 'A' WINDOW FLASHING
SECTION DETAIL (VERTICAL SCREENCLAD ONLY)
SCALE 1:5

NOTE:
NON-CORROSIVE FIXINGS TO BE USED WITH RESISTANCE LEVEL REQUIRED BY THE LOCATION / EXPOSURE.

NOTE:
ALL SARKING TO BE INSTALLED PRIOR TO FITTING WINDOWS AND BE RETURNED AND SECURED TO INNER FRAME

NOTE:
ALL VERTICALLY LAID SCREEN CLADDING MUST BE GLUED TO BATTEN WITH CONSTRUCTION ADHESIVE AND CONCEALED BY SECRET NAILING THROUGH TONGUE OF BOARD TO NCC/AS AND MANUFACTURERS SPEC.

VARIATIONS:

1. ORIGINAL ISSUE 30.01.20	

NOTES:
- THIS IS A STANDARD GENERIC DETAIL AND AS SUCH SHOULD BE TAKEN AS INDICATIVE ONLY. (WORKING DRAWINGS TAKE PRECEDENCE).
- ALL FIXINGS ARE TO BE CONCEALED AND TO MANUFACTURERS, NCC & AS SPECIFICATIONS.
- USE NON CORROSIVE FIXINGS WITH RESISTANCE RELEVANT TO EXPOSURE OF LOCATION
- WHERE EXTERNAL SHEET BRACING IS LOCATED PACKING IS REQUIRED TO ACHIEVE FLUSH BATTENS.
- BAL 12.5 UP TO & INCL. BAL 29 MUST HAVE BRICK BASE MIN 400MM HIGH ABOVE FINISHED LEVEL
- CLADDING TYPE NOT SUITABLE FOR BAL 40 & BAL FZ

SCREENCLAD CEDAR CLADDING DETAIL (VERTICAL APPLICATION)

SHEET 3 OF 3

Standard Detail

metricon

SUITE 20, LEVEL 2 RIVERWALK PLACE
238 ROBINA TOWN CENTRE DRIVE, ROBINA, QLD
Telephone: 07 5501 7200 Fax: 07 5562 2194
NSW BSA No: 36654C QLD BSA No: 04099Z
ACN: 053189496

© COPYRIGHT The ideas and concepts contained within all drawings and documents is the sole property of Metricon Homes

OWNER: METRICON HOMES
238 ROBINA TOWN CENTRE DRIVE
ROBINA

APPROVED: CRO, GHT		DATE: 30.01.20	
SCALE: AS NOTED		MST VER: 30.01.20	
DRAWN: CCO		CHKED: USM	
ISSUED DATE: 30.01.20		SHEET: 05-TYP-CLAD-10V	

K:\ROBINA\QLD DRAWINGS\CONSTRUCTION DETAILS\1002 - CONSTRUCTION DETAILS - DETAILS\CLADDING DETAILS\05-TYP-CLAD-10V_SCREENCLAD.DWG

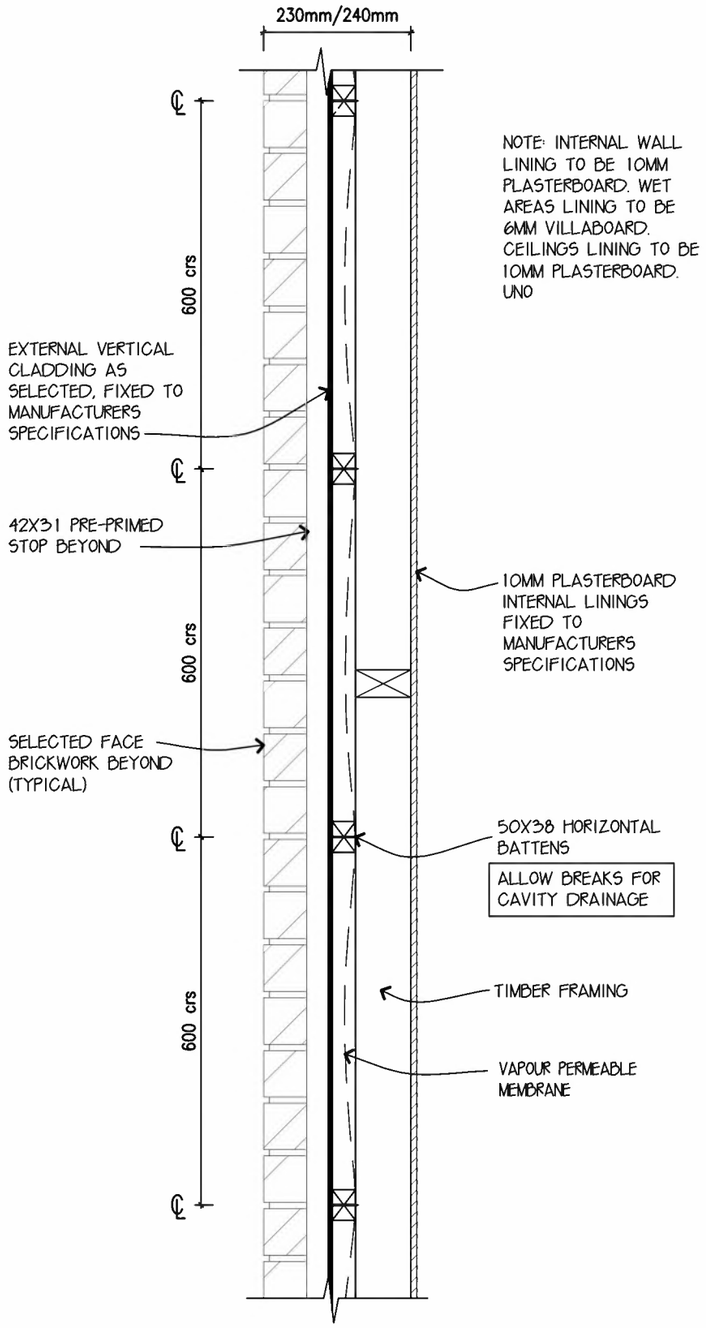

TYP CLADDING SEC-A

SCALE 1:10

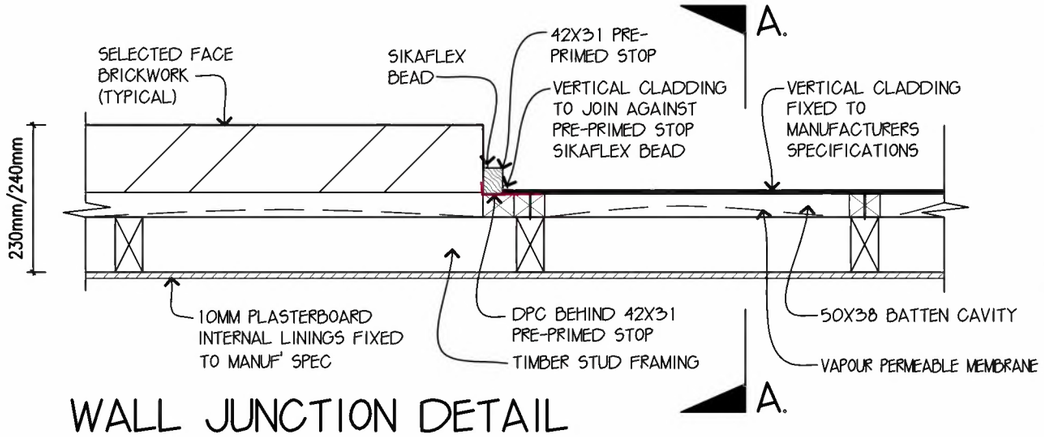

WALL JUNCTION DETAIL

SCALE 1:10

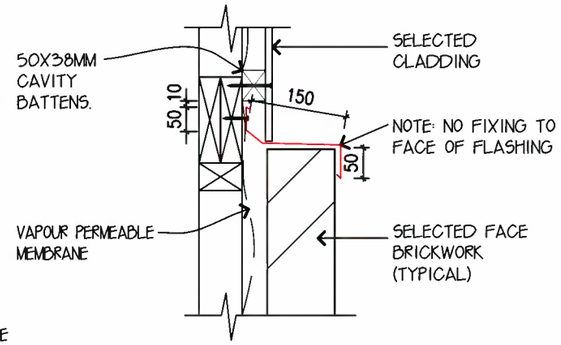

SILL JUNCTION DETAIL

SCALE 1:10

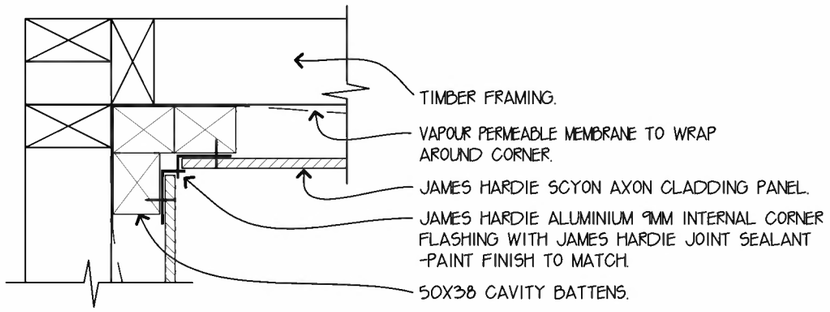

INTERNAL CNR. FIXING DETAIL

SCALE 1:5

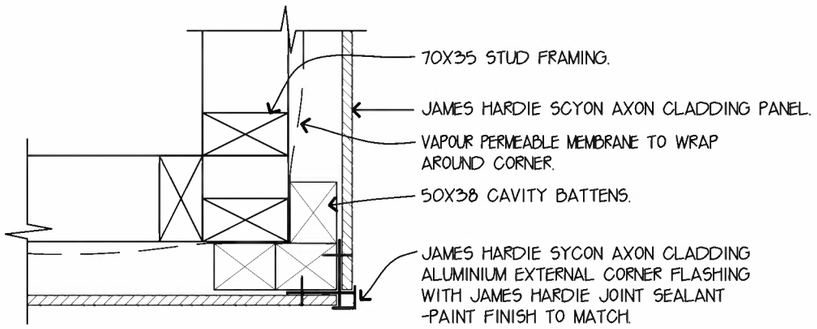

EXTERNAL CNR. FIXING DETAIL

SCALE 1:5

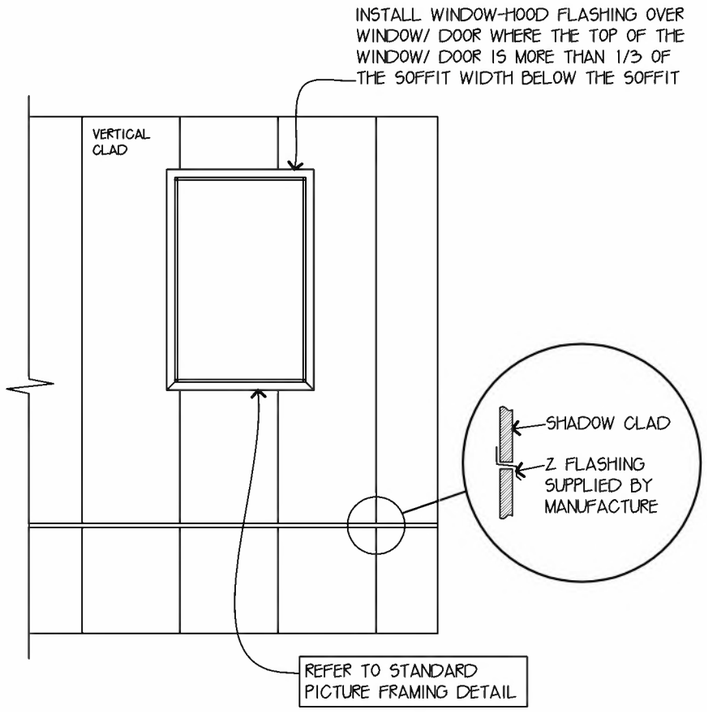

WINDOW MOULDING DETAIL

INDICATIVE

VARIATIONS:	
No: Date:	No: Date:
1. ORGINAL ISSUE 02/02/06	2. ADDED DETAIL 30/07/08
3. BATTERN SIZE 14/10/08	4. NOTES ADDED 04/04/10
5. BATTEN SIZE 08/03/12	6. FINAL CHANGE 04/10/12
7. BRICK JUNCTION 29/07/16	8. PAGE 2 DELETED 02/10/19
9. CORNER DETAIL 23/01/20	

SHADOWCLAD & AXON.
CLADDING DETAIL TYPE 1.
(TYPICAL)

SHEET 1

Standard Detail

metricon

SUITE 20, LEVEL 2 RIVERWALK PLACE
238 ROBINA TOWN CENTRE DRIVE, ROBINA, QLD
Telephone: 07 5501 7200 Fax: 07 5562 2194
NSW BSA No: 36654C QLD BSA No: 040992
ACN: 053189496

© COPYRIGHT The ideas and concepts contained within all drawings and documents is the sole property of Metricon Homes

OWNER: METRICON HOMES
238 ROBINA TOWN CENTRE DRIVE
ROBINA

APPROVED: CRO	DATE: 04.10.12
SCALE: AS NOTED	MST VER: 04.10.12
DRAWN: PWY	CHKED: CRO
ISSUED DATE: 04.10.12	SHEET: 05-TYP-CLAD-01

K:\ROBINA\OLD DRAWINGS\CONSTRUCTION DETAILS\002 - CONSTRUCTION DETAILS - DETAILS\CLADDING DETAILS\05-TYP-CLAD-01 AXON.DWG

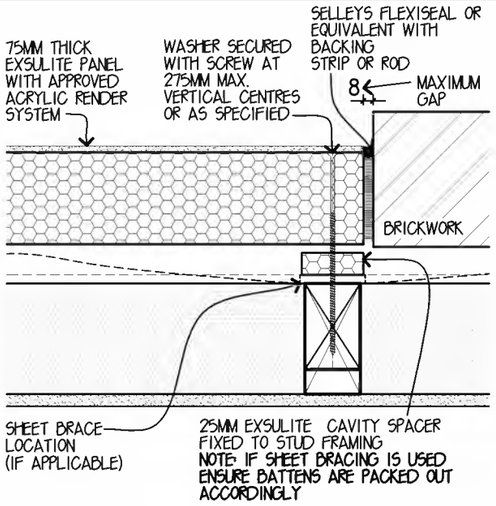

TYPICAL PLAN VIEW
BATTEN POSITION & ABUTMENT W-/BRICKWORK
SCALE 1:5

NOTE:
FOR FURTHER INFORMATION REFER TO EXSULITE FACADE SYSTEMS SPECIFICATION AND INSTALLATION MANUAL AND CONSTRUCTION DRAWINGS.

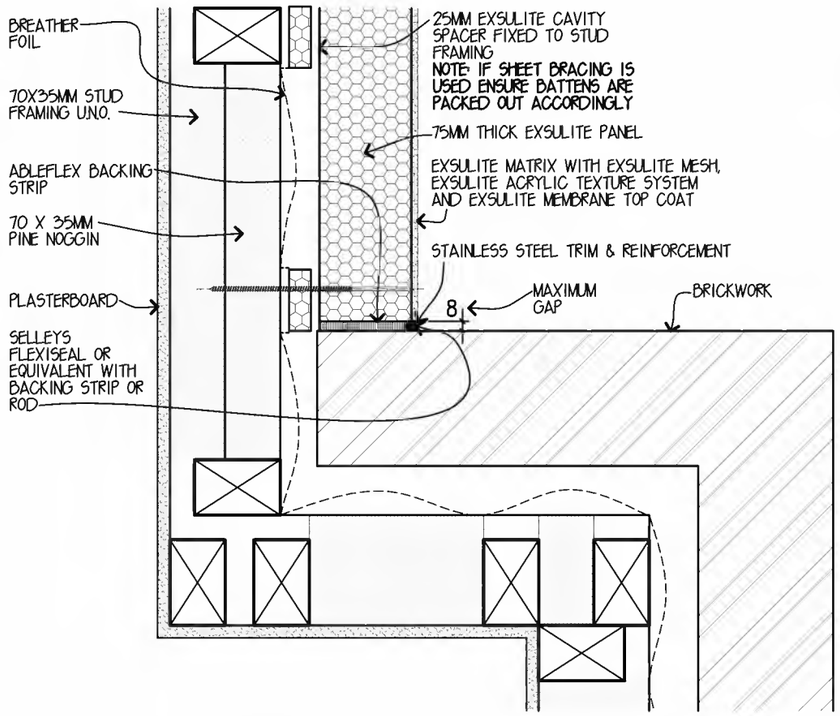

TYPICAL PLAN VIEW
INTERNAL CORNER BRICKWORK/EXSULITE
SCALE 1:5

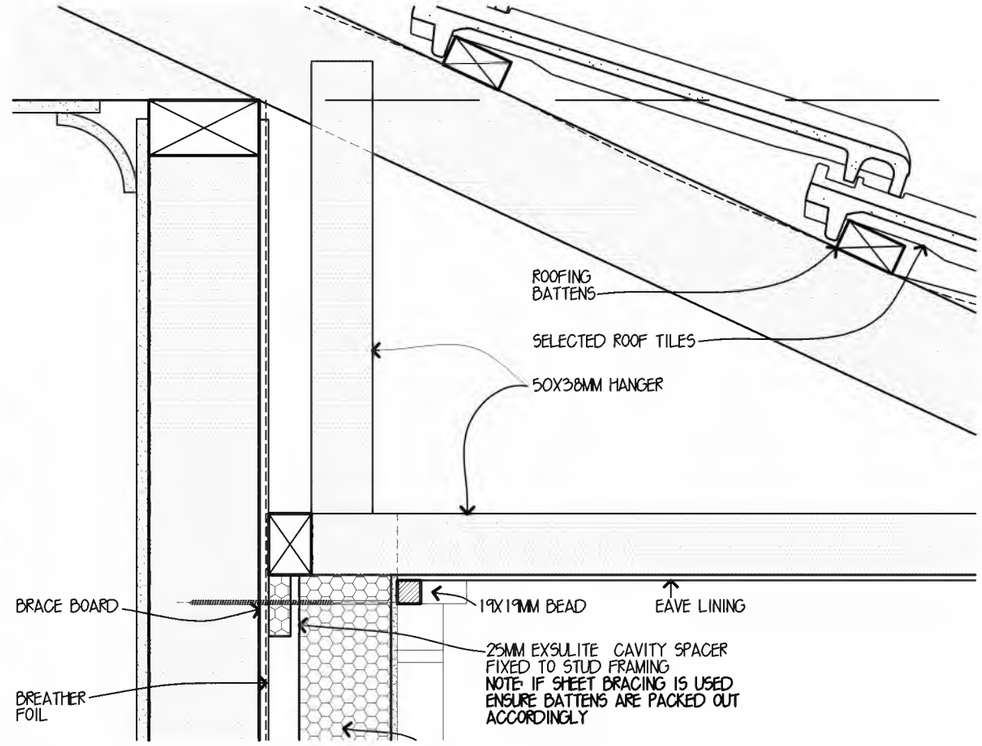

EAVE JUNCTION
SECTION C-C
SCALE 1:5

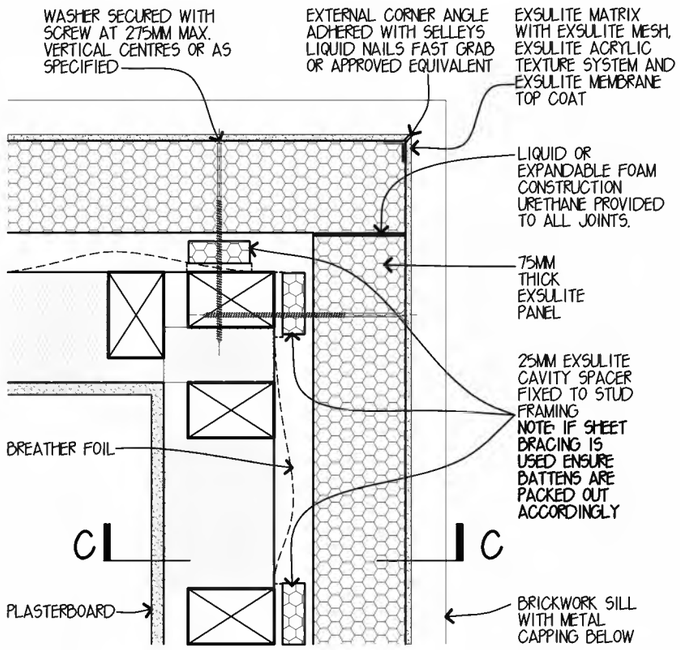

TYPICAL PLAN VIEW
EXTERNAL CORNER
SCALE 1:5

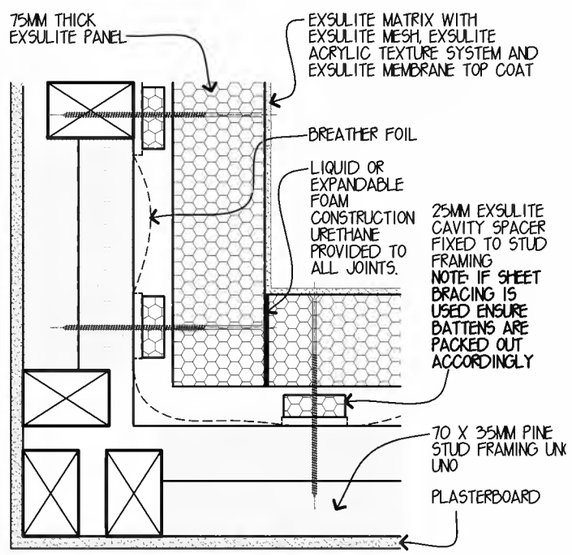

TYPICAL PLAN VIEW
INTERNAL CORNER
SCALE 1:5

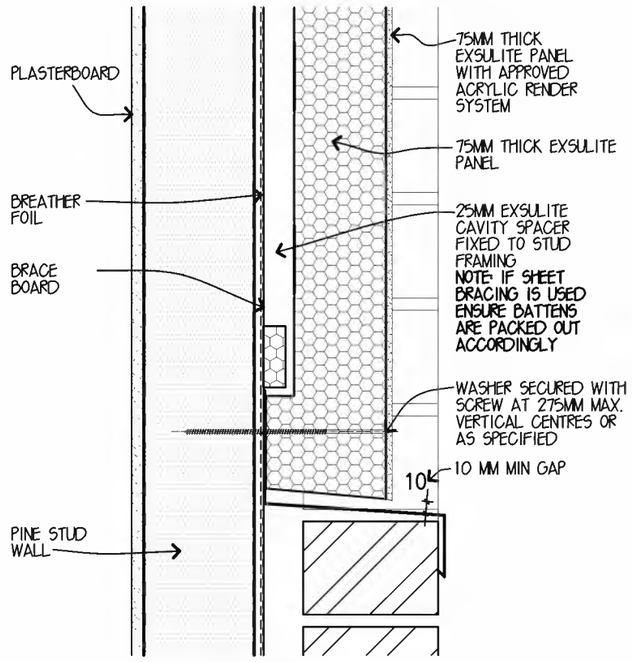

EXSULITE/BRICKWORK JUNCTION
SCALE 1:5

DULUX EXSULITE DETAILS

SHEET 1

Standard Detail

metricon
SUITE 20, LEVEL 2 RIVERWALK PLACE
238 ROBINA TOWN CENTRE DRIVE, ROBINA, QLD
Telephone: 07 5501 7200 Fax: 07 5562 2194
NSW BSA No: 36654C QLD BSA No: 040992
ACN: 053189496

© COPYRIGHT The ideas and concepts contained within all drawings and documents is the sole property of Metricon Homes

METRICON HOMES
238 ROBINA TOWN CENTRE DRIVE
ROBINA

APPROVED: GHT	DATE: 17.05.17
SCALE: AS NOTED	MST VER: 02.02.17
DRAWN: JSM	CHKED: GHT
ISSUED DATE: 19.05.17	SHEET: 05-TYP-CLAD-16

K:\ROBINA\QLD DRAWINGS\CONSTRUCTION DETAILS\002 - CONSTRUCTION DETAILS - DETAILS\CLADDING DETAILS\05-TYP-CLAD-16 EPS WIP.DWG

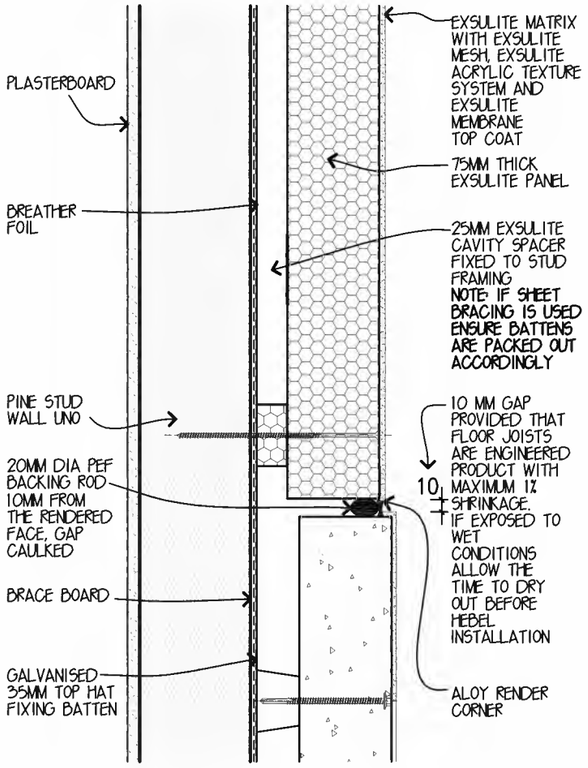

EXSULITE/HEBEL JUNCTION
SECTION

SCALE 1:5

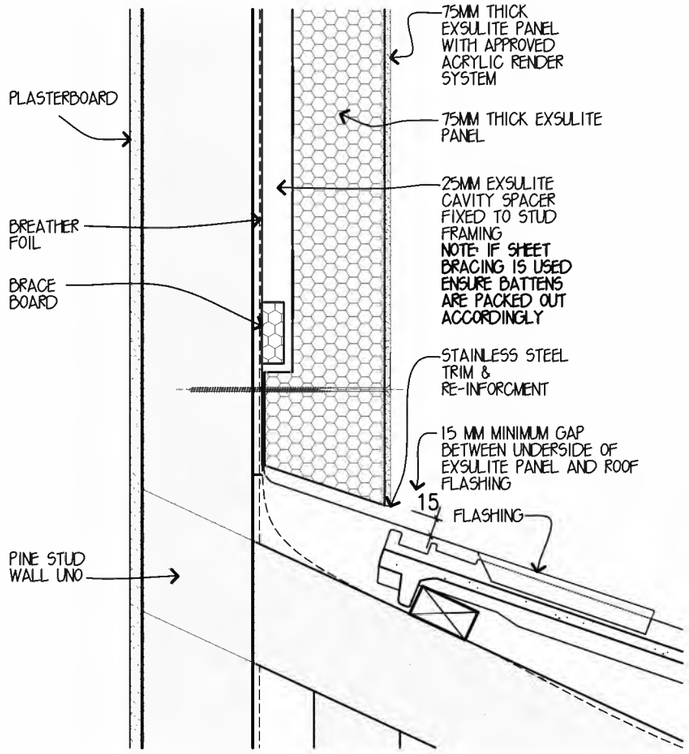

EXSULITE/LOWER TILED ROOF JUNCTION
SECTION

SCALE 1:5

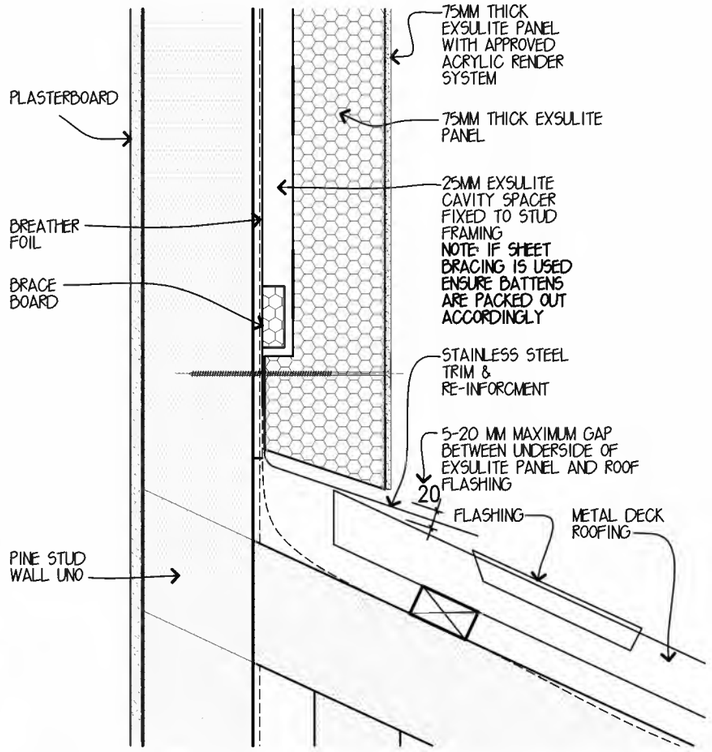

EXSULITE/LOWER METAL ROOF JUNCTION
SECTION

SCALE 1:5

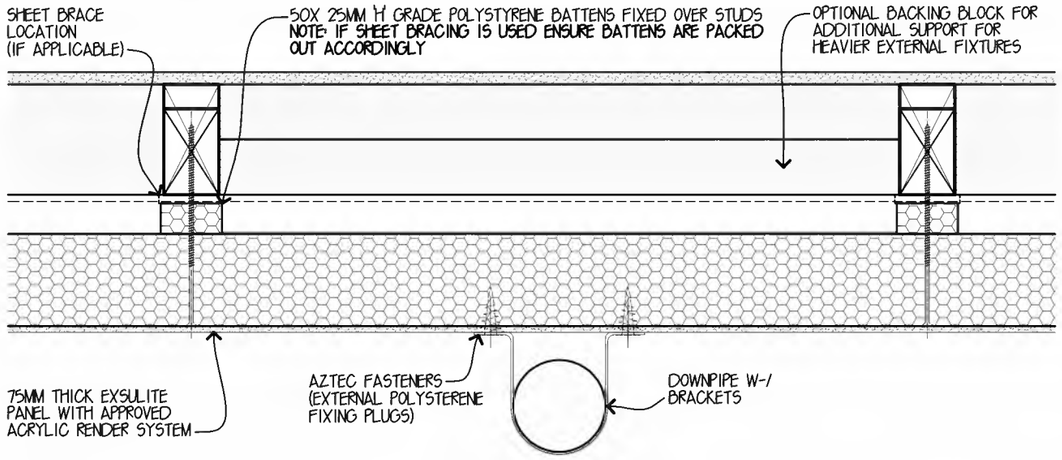

DOWNPIPE
PLAN VIEW

SCALE 1:5

NOTE:
FOR FURTHER INFORMATION REFER TO EXSULITE FACADE SYSTEMS SPECIFICATION AND INSTALLATION MANUAL AND CONSTRUCTION DRAWINGS.

DULUX EXSULITE DETAILS

SHEET 2

Standard Detail

metricon
SUITE 20, LEVEL 2 RIVERWALK PLACE
238 ROBINA TOWN CENTRE DRIVE, ROBINA, QLD
Telephone: 07 5501 7200 Fax: 07 5562 2194
NSW BSA No: 36654C QLD BSA No: 040992
ACN: 053189496
© COPYRIGHT The ideas and concepts contained within all drawings and documents is the sole property of Metricon Homes

METRICON HOMES
238 ROBINA TOWN CENTRE DRIVE
ROBINA

APPROVED: GHT	DATE: 17.05.17
SCALE: AS NOTED	MST VER: 02.02.17
DRAWN: JSM	CHKED: GHT
ISSUED DATE: 19.05.17	SHEET: QS-TYP-CLAD-16

K:\ROBINA\QLD DRAWINGS\CONSTRUCTION DETAILS\002 - CONSTRUCTION DETAILS - DETAILS\CLADDING DETAILS\QS-TYP-CLAD-16 EPS WIP.DWG

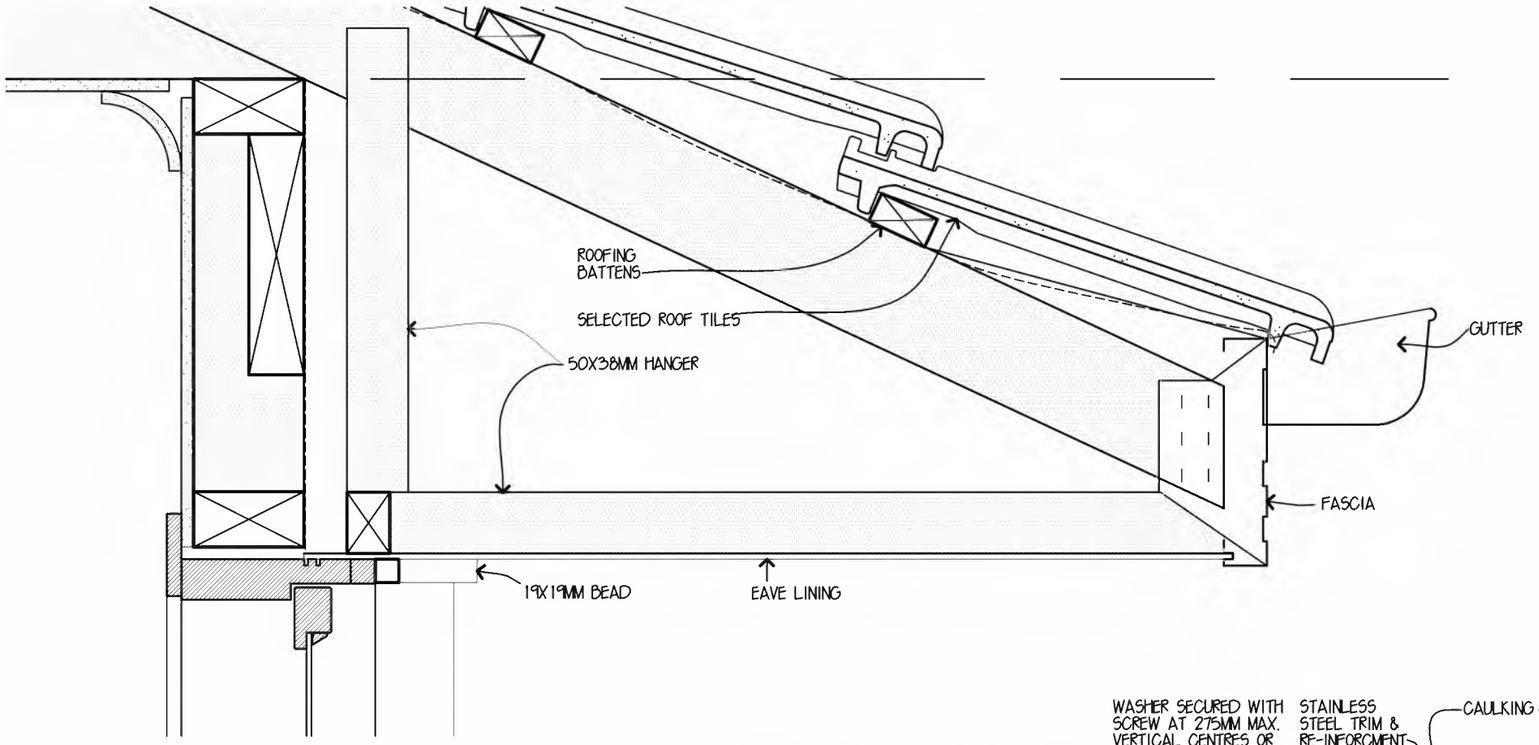

NOTE:
FOR FURTHER INFORMATION REFER TO EXSULITE FACADE SYSTEMS SPECIFICATION AND INSTALLATION MANUAL AND CONSTRUCTION DRAWINGS.

TYPICAL SECTION VIEW
TIMBER WINDOW HEAD

SCALE 1:5

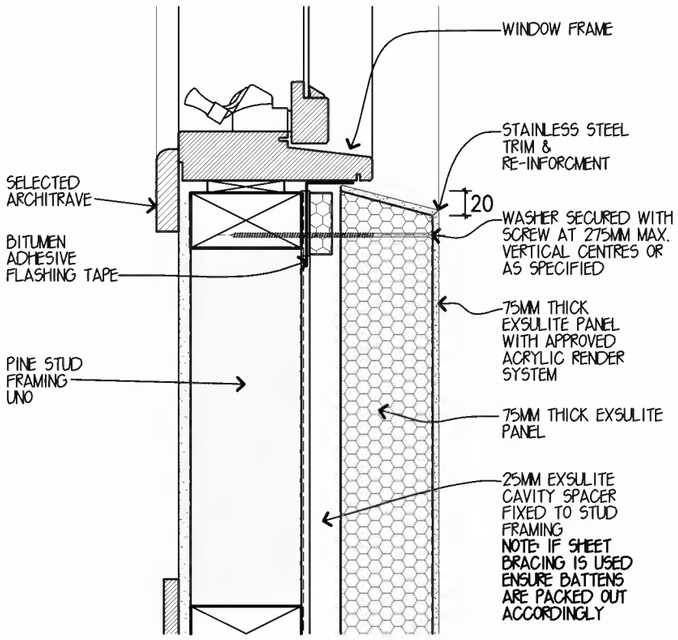

TYPICAL SECTION VIEW
TIMBER WINDOW SILL

SCALE 1:5

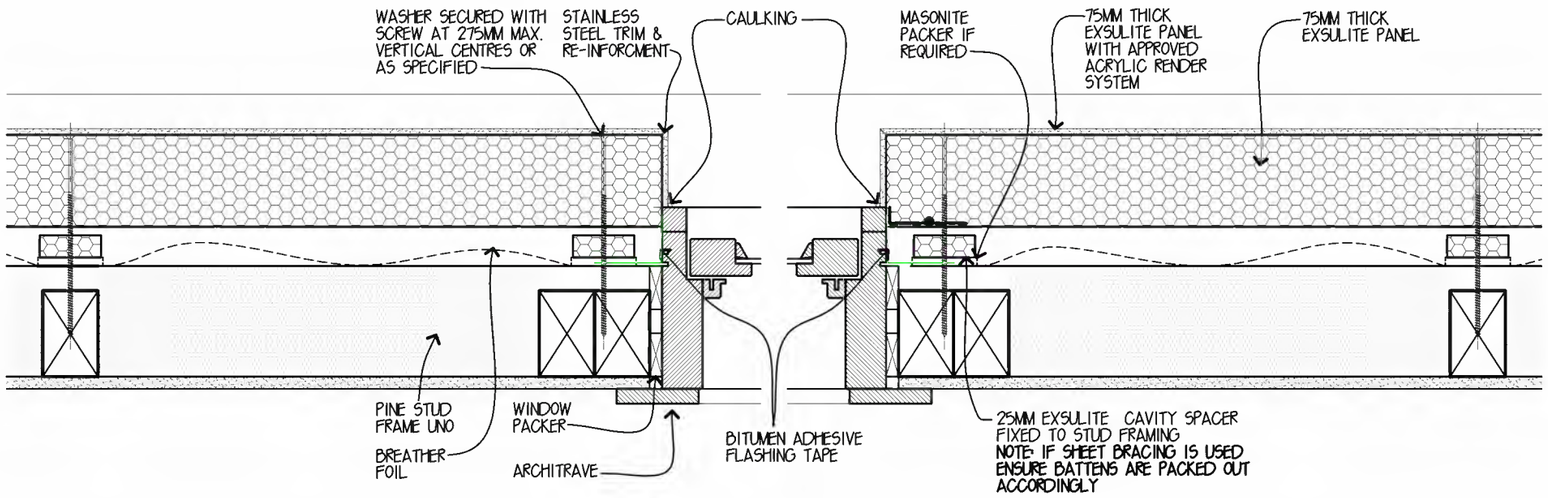

TYPICAL PLAN VIEW
TIMBER WINDOW DETAIL

SCALE 1:5

DULUX EXSULITE DETAILS

SHEET 3

Standard Detail

metricon

SUITE 20, LEVEL 2 RIVERWALK PLACE
238 ROBINA TOWN CENTRE DRIVE, ROBINA, QLD
Telephone: 07 5501 7200 Fax: 07 5562 2194
NSW BSA No: 36654C QLD BSA No: 040992
ACN: 053189496

© COPYRIGHT The ideas and concepts contained within all drawings and documents is the sole property of Metricon Homes

METRICON HOMES
238 ROBINA TOWN CENTRE DRIVE
ROBINA

APPROVED: GHT	DATE: 17.05.17
SCALE: AS NOTED	MST VER: 02.02.17
DRAWN: JSM	CHKED: GHT
ISSUED DATE: 19.05.17	SHEET: QS-TYP-CLAD-16

K:\ROBINA\QLD DRAWINGS\CONSTRUCTION DETAILS\002 - CONSTRUCTION DETAILS - DETAILS\CLADDING DETAILS\QS-TYP-CLAD-16 EPS WIP.DWG

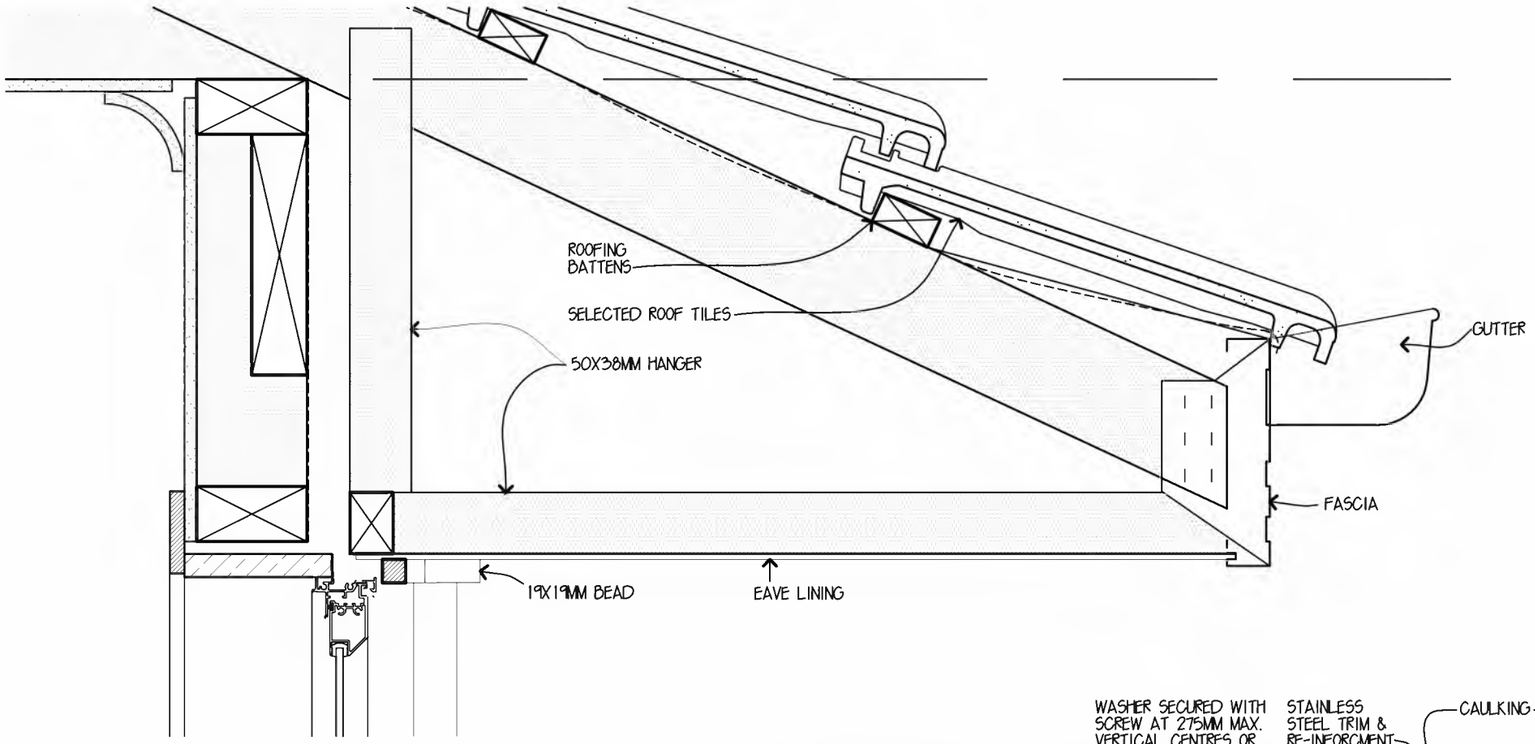

NOTE:
FOR FURTHER INFORMATION REFER TO EXSULITE FACADE SYSTEMS SPECIFICATION AND INSTALLATION MANUAL AND CONSTRUCTION DRAWINGS.

TYPICAL SECTION VIEW
ALUMINIUM WINDOW HEAD

SCALE 1:5

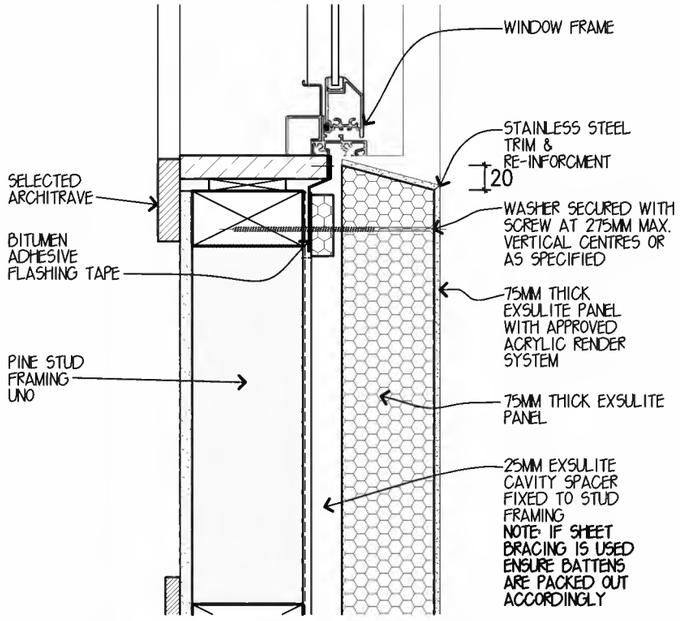

TYPICAL SECTION VIEW
ALUMINIUM WINDOW SILL

SCALE 1:5

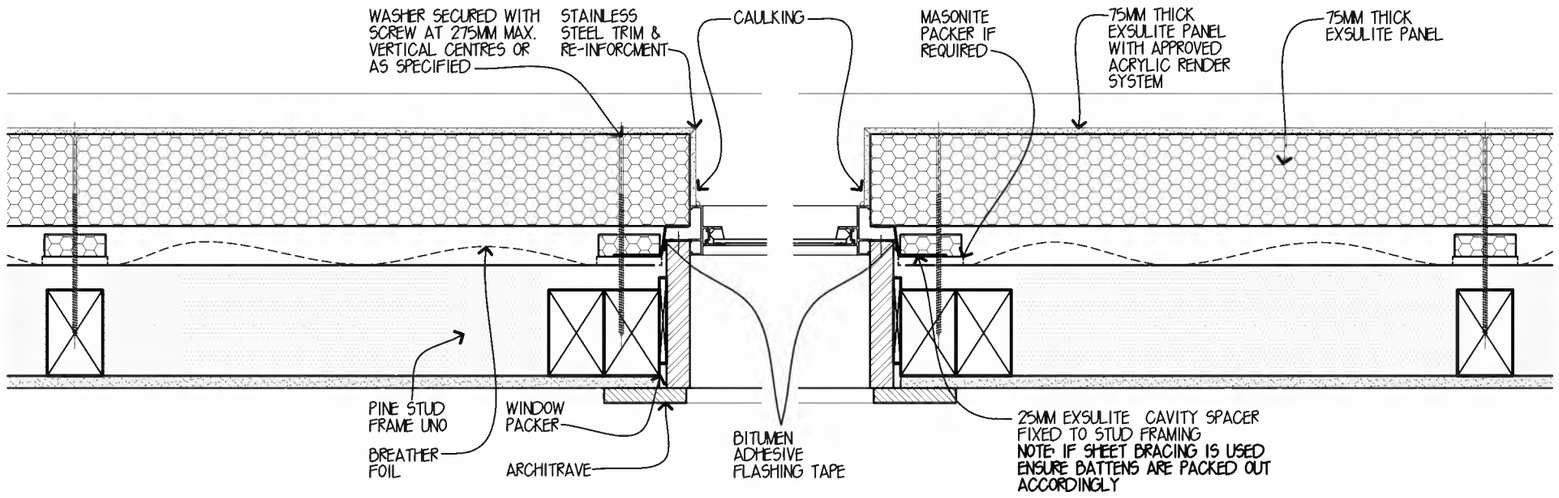

TYPICAL PLAN VIEW
ALUMINIUM WINDOW DETAIL

SCALE 1:5

DULUX EXSULITE DETAILS

SHEET 4

Standard Detail

metricon

SUITE 20, LEVEL 2 RIVERWALK PLACE
238 ROBINA TOWN CENTRE DRIVE, ROBINA, QLD
Telephone: 07 5501 7200 Fax: 07 5562 2194
NSW BSA No: 36654C QLD BSA No: 040992
ACN: 053189496

© COPYRIGHT The ideas and concepts contained within all drawings and documents is the sole property of Metricon Homes

METRICON HOMES
238 ROBINA TOWN CENTRE DRIVE
ROBINA

APPROVED: GHT	DATE: 17.05.17
SCALE: AS NOTED	MST VER: 02.02.17
DRAWN: JSM	CHKED: GHT
ISSUED DATE: 19.05.17	SHEET: Q5-TYP-CLAD-16

K:\ROBINA\QLD DRAWINGS\CONSTRUCTION DETAILS\002 - CONSTRUCTION DETAILS - DETAILS\CLADDING DETAILS\05-TYP-CLAD-16 EPS WIP.DWG

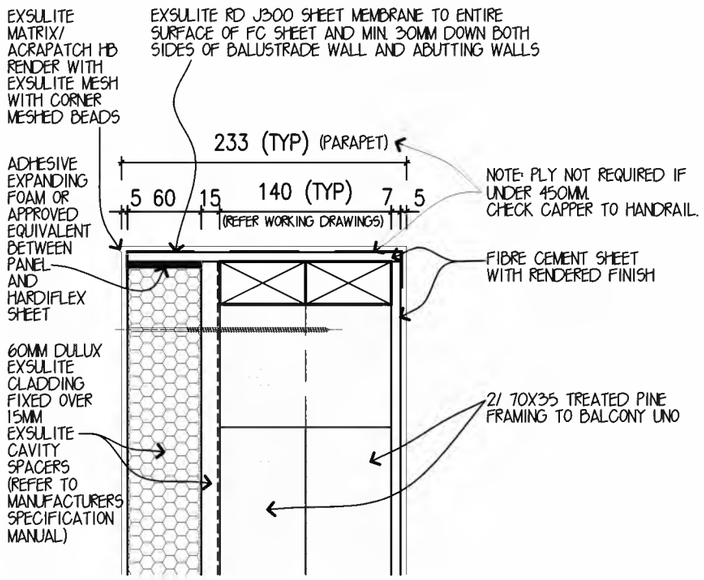

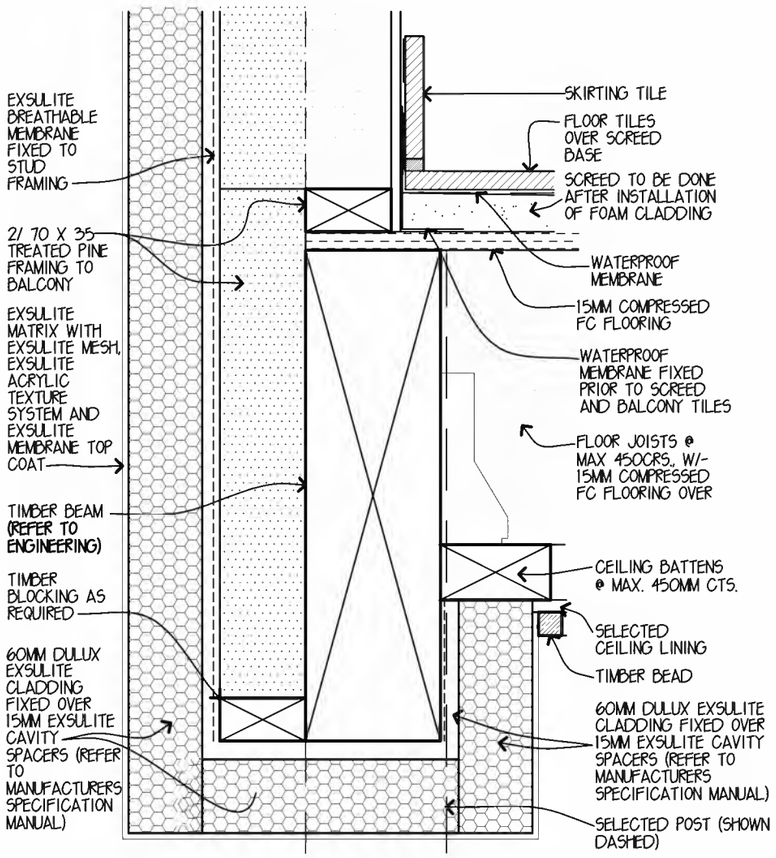

TYPICAL BALCONY WALL DETAIL

SCALE 1:5

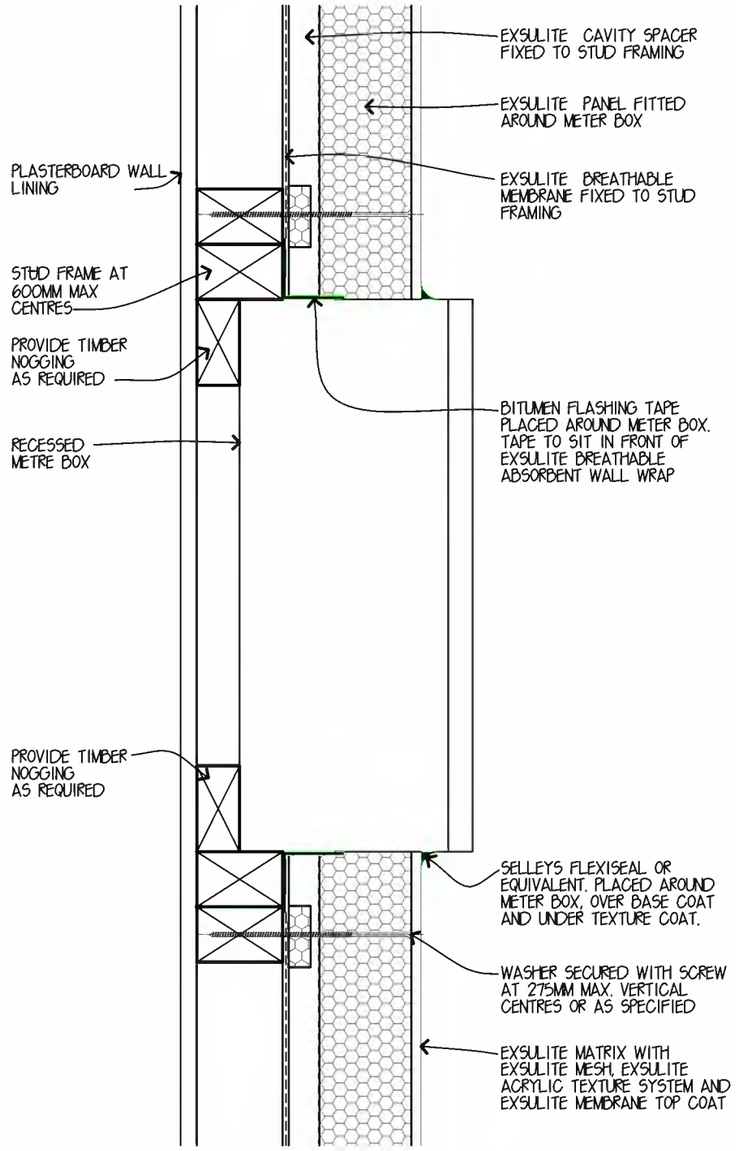

TYPICAL METER BOX PENETRATION

SECTION

SCALE 1:5

NOTE:
FOR FURTHER INFORMATION REFER TO EXSULITE FACADE SYSTEMS SPECIFICATION AND INSTALLATION MANUAL AND CONSTRUCTION DRAWINGS.

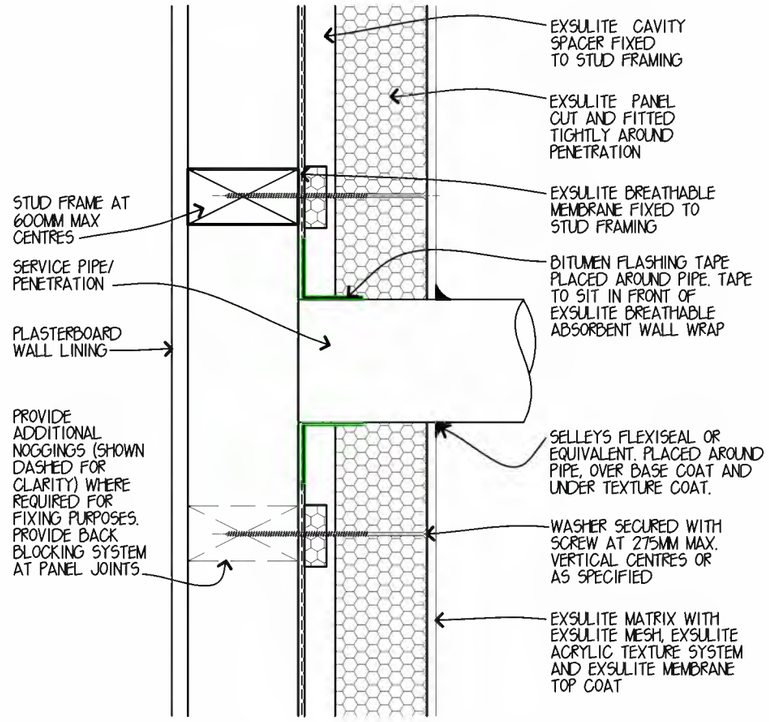

TYPICAL WALL PENETRATION

SECTION

SCALE 1:5

DULUX EXSULITE DETAILS

SHEET 5

Standard Detail

metricon

SUITE 20, LEVEL 2 RIVERWALK PLACE
238 ROBINA TOWN CENTRE DRIVE, ROBINA, QLD
Telephone: 07 5501 7200 Fax: 07 5562 2194
NSW BSA No: 36654C QLD BSA No: 040992
ACN: 053189496

© COPYRIGHT The ideas and concepts contained within all drawings and documents is the sole property of Metricon Homes

METRICON HOMES
238 ROBINA TOWN CENTRE DRIVE
ROBINA

APPROVED: GHT	DATE: 17.05.17
SCALE: AS NOTED	MST VER: 02.02.17
DRAWN: JSM	CHKED: GHT
ISSUED DATE: 19.05.17	SHEET: QS-TYP-CLAD-16

K:\ROBINA\QLD DRAWINGS\CONSTRUCTION DETAILS\002 - CONSTRUCTION DETAILS - DETAILS\CLADDING DETAILS\QS-TYP-CLAD-16 EPS WIP.DWG

NOTE:
FOR FURTHER INFORMATION REFER TO EXSULITE FACADE SYSTEMS SPECIFICATION AND INSTALLATION MANUAL AND CONSTRUCTION DRAWINGS.

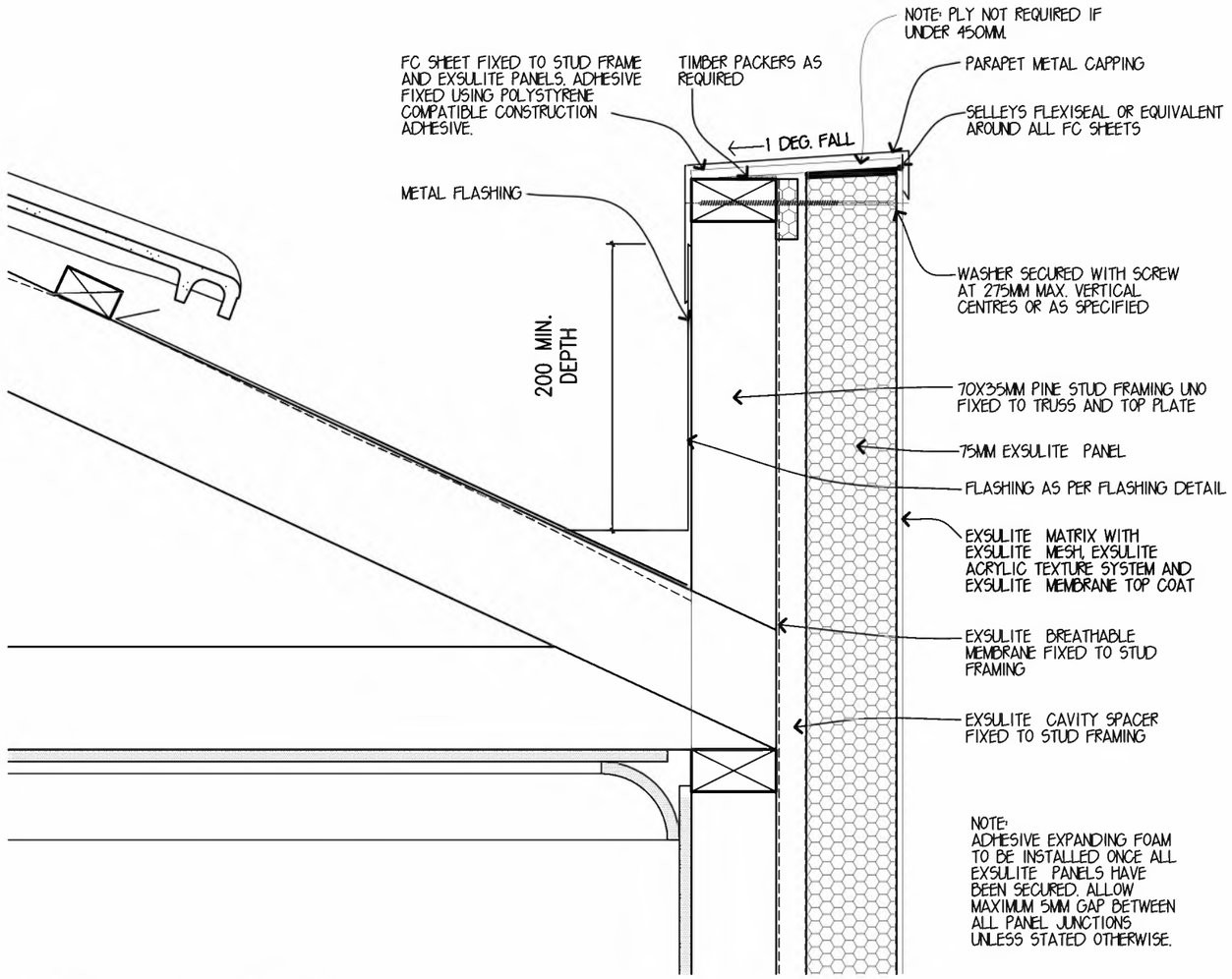

TYPICAL PARAPET DETAIL
SECTION
SCALE 1:5

DULUX EXSULITE DETAILS

SHEET 6

Standard Detail

metricon

SUITE 20, LEVEL 2 RIVERWALK PLACE
238 ROBINA TOWN CENTRE DRIVE, ROBINA, QLD
Telephone: 07 5501 7200 Fax: 07 5562 2194
NSW BSA No: 36654C QLD BSA No: 040992
ACN: 053189496
© COPYRIGHT The ideas and concepts contained within all drawings and documents is the sole property of Metricon Homes

METRICON HOMES
238 ROBINA TOWN CENTRE DRIVE
ROBINA

APPROVED: GHT	DATE: 17.05.17
SCALE: AS NOTED	MST VER: 02.02.17
DRAWN: JSM	CHKED: GHT
ISSUED DATE: 19.05.17	SHEET: QS-TYP-CLAD-16

K:\ROBINA\QLD DRAWINGS\CONSTRUCTION DETAILS\002 - CONSTRUCTION DETAILS - DETAILS\CLADDING DETAILS\QS-TYP-CLAD-16 EPS WIP.DWG

NOTE:
FOR FURTHER INFORMATION REFER TO EXSULITE FACADE SYSTEMS SPECIFICATION AND INSTALLATION MANUAL AND CONSTRUCTION DRAWINGS.

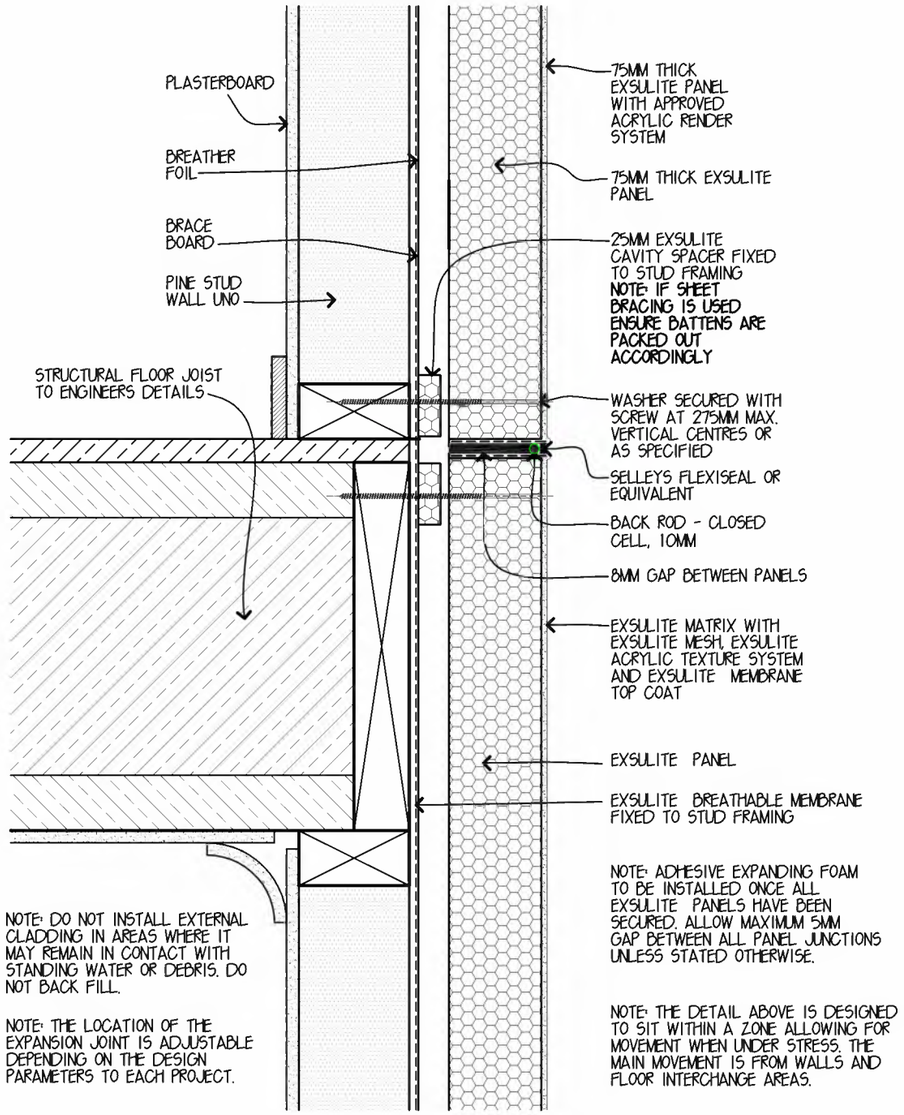

EXSULITE PANEL EXPANSION JOINT

SCALE 1:5

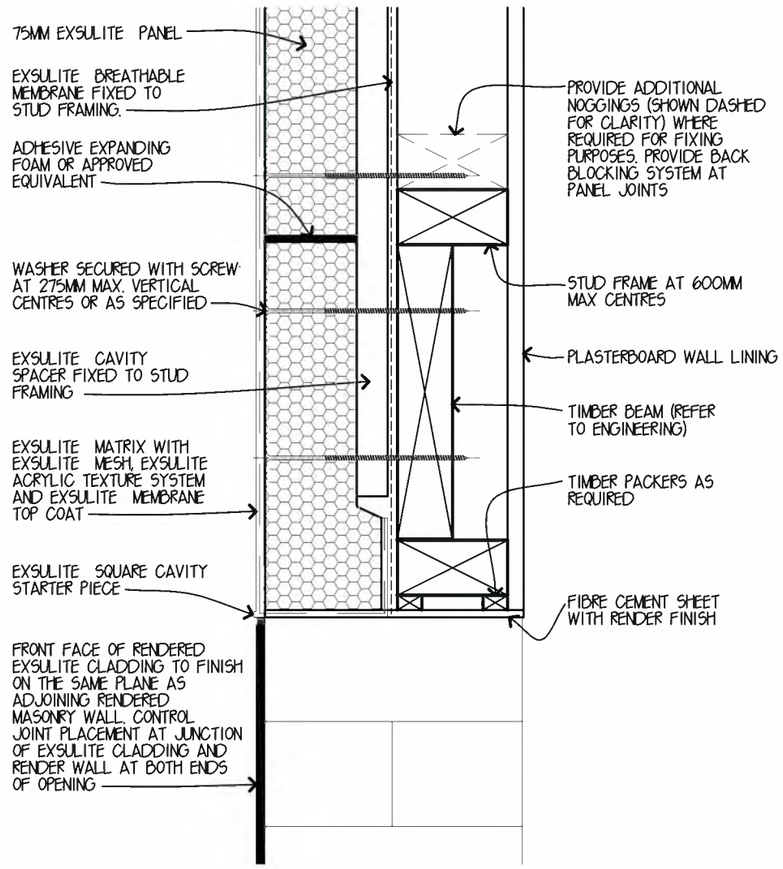

NOTE: SPACE BETWEEN STUD FRAMING AND EXSULITE CAVITY SPACER IS SHOWN GREATER FOR CLARITY.

NOTE: ADHESIVE EXPANDING FOAM TO BE INSTALLED ONCE ALL EXSULITE PANELS HAVE BEEN SECURED. ALLOW MAXIMUM 5MM GAP BETWEEN ALL PANEL JUNCTIONS UNLESS STATED OTHERWISE.

NOTE: DO NOT INSTALL EXTERNAL CLADDING IN AREAS WHERE IT MAY REMAIN IN CONTACT WITH STANDING WATER OR DEBRIS. DO NOT BACK FILL.

TYPICAL GARAGE BULKHEAD

SECTION

SCALE 1:5

DULUX EXSULITE DETAILS

SHEET 7

Standard Detail

metricon

SUITE 20, LEVEL 2 RIVERWALK PLACE
238 ROBINA TOWN CENTRE DRIVE, ROBINA, QLD
Telephone: 07 5501 7200 Fax: 07 5562 2194
NSW BSA No: 36654C QLD BSA No: 040992
ACN: 053189496

© COPYRIGHT The ideas and concepts contained within all drawings and documents is the sole property of Metricon Homes

METRICON HOMES
238 ROBINA TOWN CENTRE DRIVE
ROBINA

APPROVED: GHT	DATE: 17.05.17
SCALE: AS NOTED	MST VER: 02.02.17
DRAWN: JSM	CHKED: GHT
ISSUED DATE: 19.05.17	SHEET: QS-TYP-CLAD-16

K:\ROBINA\QLD DRAWINGS\CONSTRUCTION DETAILS\002 - CONSTRUCTION DETAILS - DETAILS\CLADDING DETAILS\QS-TYP-CLAD-16 EPS WIP.DWG

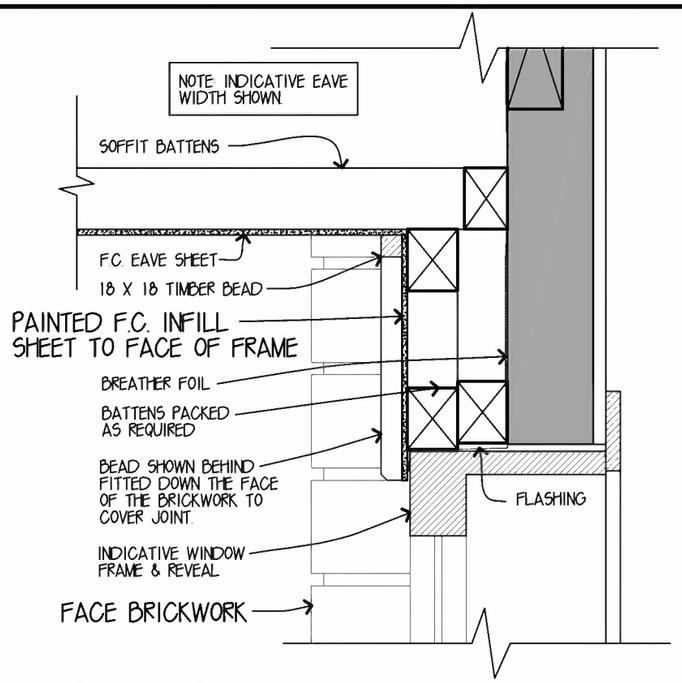

FACE BRICK
INFILL ABOVE DOORS & WINDOWS
SCALE 1:5

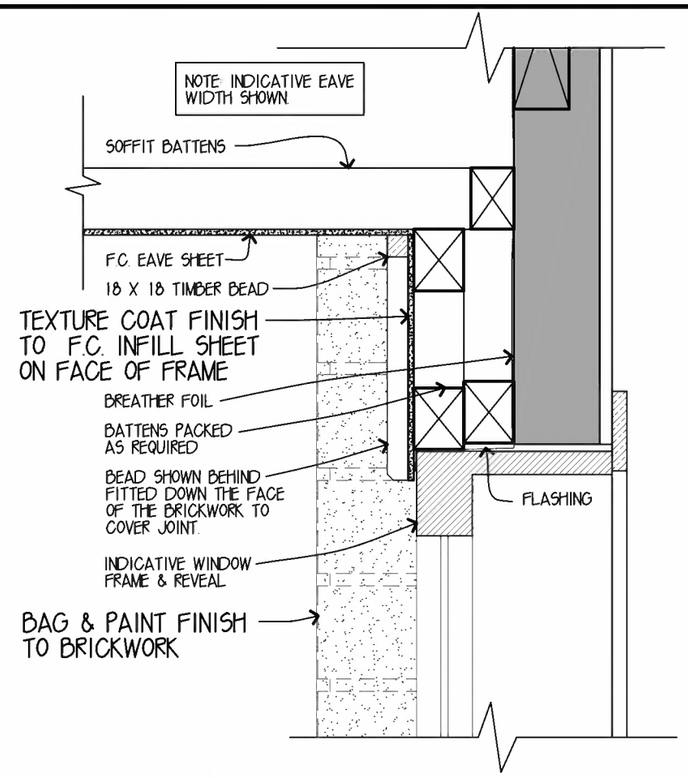

BAG & PAINT FINISH
INFILL ABOVE DOORS & WINDOWS
SCALE 1:5

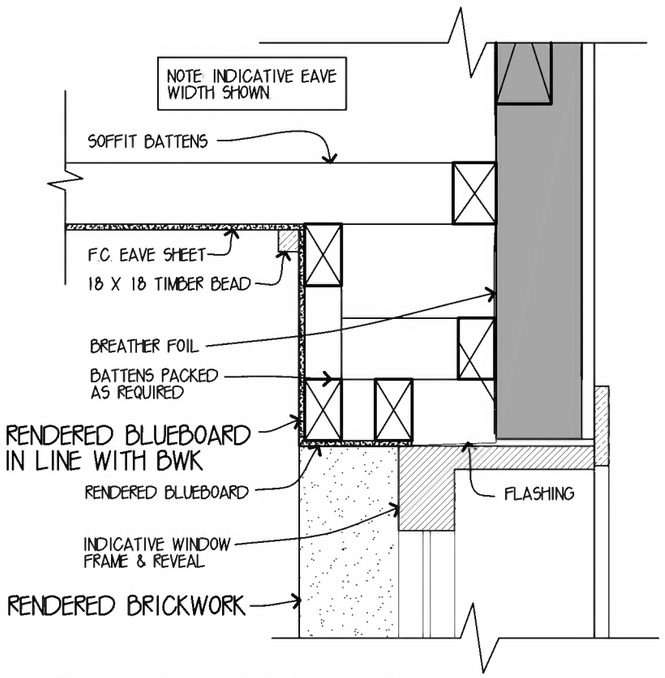

RENDERED BRICKWORK
INFILL ABOVE DOORS & WINDOWS
SCALE 1:5

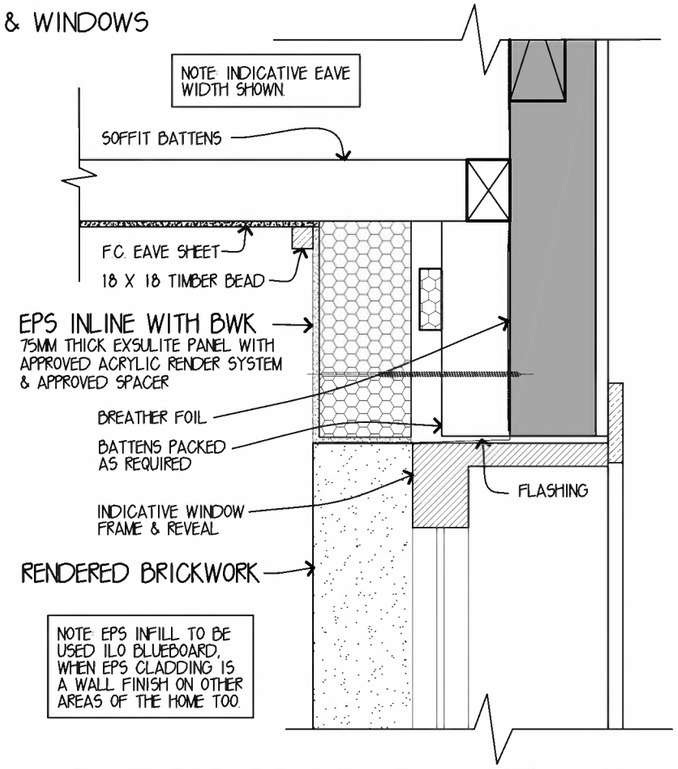

RENDERED BRICKWORK - EPS INFILL
INFILL ABOVE DOORS & WINDOWS
SCALE 1:5

AMENDMENTS:

No:	Details:	Int:	Date:
1	Initial Issue	JSM	24.10.19
2	Bag & Paint infill texture coating	JSM	05.06.20

NOTES:
* THIS IS A STANDARD GENERIC DETAIL AND AS SUCH SHOULD BE TAKEN AS INDICATIVE ONLY. (WORKING DRAWINGS TAKE PRECEDENCE).

INFILL TYPES ABOVE WINDOWS & DOORS

SUMMARY

Standard Detail

metricon
SUITE 20, LEVEL 2 RIVERWALK PLACE
238 ROBINA TOWN CENTRE DRIVE, ROBINA, QLD
Telephone: 07 5501 7200 Fax: 07 5562 2194
NSW BSA No: 36654C QLD BSA No: 040992
ACN: 053189496
© COPYRIGHT The ideas and concepts contained within all drawings and documents is the sole property of Metricon Homes

METRICON HOMES OWNS COPYRIGHT IN THIS DRAWING. UNAUTHORISED USE, REPRODUCTION OR ADAPTION IS FORBIDDEN AND WILL BE PROSECUTED.

LATEST SITE INSTRUCTION:

SCALE: AS NOTED	MST VER: 24.10.19
DRAWN: JSM	CHKED: GHT
ISSUE DATE: 24.10.19	SHEET: 05-TYP-WIND-05A

K:\ROBINA\QLD DRAWINGS\CONSTRUCTION DETAILS\002 - CONSTRUCTION DETAILS - DETAILS\DOORS AND WINDOWS DETAILS\05-TYP-WIND-05A.DWG